SITE PLAN FOR

MIDTOWN CENTER

CITY OF WINDSOR HEIGHTS, POLK COUNTY, IOWA

GENERAL NOTES

A. SEE ARCHITECTURAL AND STRUCTURAL PLANS FOR DETAILED INFORMATION ON BUILDING CONSTRUCTION.

B. CONTRACTOR SHALL PROTECT ALL UTILITIES AND SITE IMPROVEMENTS NOT SHOWN TO BE REMOVED. CONTRACTOR SHALL REPAIR ANY DAMAGED UTILITIES OR SITE FEATURES TO THE OWNER'S SPECIFICATIONS WITHOUT COST TO THE OWNER.

C. CONTRACTOR TO VERIFY ALL UTILITY CROSSINGS AND MAINTAIN A MINIMUM OF 18 INCHES VERTICAL AND HORIZONTAL SEPARATION BETWEEN UTILITIES. CONTRACTOR TO VERIFY BUILDING CONNECTION LOCATIONS AND INVERT ELEVATIONS WITH ARCHITECTURAL AND MECHANICAL PLANS PRIOR TO CONSTRUCTION.

D. PRIOR TO CONSTRUCTION THE CONTRACTOR SHALL VERIFY SITE LAYOUT AND ALL SITE CONSTRUCTION ITEMS.

E. NOTIFY SITE OWNER AND UTILITY OWNERS PRIOR TO BEGINNING CONSTRUCTION ACTIVITIES.

F. CONTRACTOR SHALL VERIFY THE EXACT LOCATION, SIZE, AND DEPTH OF ALL UTILITIES PRIOR TO CONSTRUCTION AND AVOID DAMAGING EXISTING SERVICES AND UTILITIES DURING CONSTRUCTION.

G. PROPOSED BUILDING AND SITE IMPROVEMENTS ARE TO BE PARALLEL OR PERPENDICULAR TO THE EXISTING BUILDING UNLESS OTHERWISE SHOWN.

H. CONTRACTOR SHALL COORDINATE ALL CONSTRUCTION ACTIVITIES WITH UTILITY PROVIDERS.

I. CONTRACTOR SHALL STRIP AND STOCKPILE TOPSOIL FROM ALL AREAS TO BE CUT OR FILLED. STOCKPILE TOPSOIL SHALL BE SPREAD TO A MINIMUM 6 INCH DEPTH TO THE PROPOSED FINISH GRADE. CONTRACTOR MAY NEED TO SUPPLY TOPSOIL FROM OFF-SITE AS NECESSARY TO PROVIDE THE REQUIRED TOPSOIL THICKNESS.

J. PROVIDE POSITIVE DRAINAGE AWAY FROM BUILDING STRUCTURES WITH 2.0% MINIMUM SLOPE FOR TURF AREAS AND 1.0% MINIMUM SLOPE FOR PAVED AREAS. CONTRACTOR TO NOTIFY ENGINEER IF CONDITIONS WILL NOT ALLOW POSITIVE DRAINAGE AWAY FROM STRUCTURES.

K. SPOT ELEVATIONS AND PROPOSED CONTOURS SHOWN ARE TOP OF PAVING SLAB OR FINISHED GRADES UNLESS NOTED.

L. DISPOSAL OF CONSTRUCTION DEBRIS AT THIS LOCATION IS NOT ALLOWED. CONTRACTOR SHALL REMOVE AND TRANSPORT ALL MATERIALS NOT REMAINING AS PART OF THE PROJECT TO AN APPROVED OFF-SITE WASTE FACILITY. SITE CONTRACTOR SHALL REMOVE ALL DEBRIS AND CONSTRUCTION MATERIALS SPILLED ON ADJACENT PROPERTIES WITHIN 48 HOURS OF SPILL.

M. CONTRACTOR TO SEED AND MULCH ALL DISTURBED AREAS.

N. EROSION CONTROL MEASURES SHOWN ON SITE PLAN ARE CONSIDERED MINIMUM REQUIREMENTS. IT IS THE RESPONSIBILITY OF THE CONTRACTOR TO PROVIDE ADDITIONAL EROSION CONTROL MEASURES TO PROHIBIT SEDIMENT FROM LEAVING THE CONSTRUCTION SITE. THE CONTRACTOR CAN USE OTHER EROSION CONTROL MEASURES NOT SHOWN, SUCH AS FILTER SOCKS, SEDIMENTATION BASINS, OR OTHERS APPROVED BY THE ENGINEER.

DATE OF FIELD WORK

04-03-2014 BY OLSSON ASSOCIATES

DATE OF FIELD WORK

CONTROL POINT #1	CONTROL POINT #3
SET PK NAIL	SET PK NAIL
NORTHING: 583070.433	NORTHING: 582860.365
EASTING: 1580869.119	EASTING: 1581752.465
ELEVATION: 835.144'	ELEVATION: 843.819'
CONTROL POINT #2	CONTROL POINT #4
SET PK NAIL	SET PK NAIL.
NORTHING: 583020.366	NORTHING: 582585.645
EASTING: 1581752.465	EASTING: 1580943.410
ELEVATION: 848.045'	ELEVATION: 830.737'

UTILITY COMPANIES:

THE UTILITIES SHOWN HAVE BEEN LOCATED FROM FIELD SURVEY INFORMATION AND/OR RECORDS OBTAINED. THE SURVEYOR MAKES NO GUARANTEE THAT THE UTILITIES SHOWN COMPRISE ALL SUCH UTILITIES IN THE AREA. EITHER IN SERVICE OR ABANDONED. THE SURVEYOR FURTHER DOES NOT WARRANT THAT THE UTILITIES SHOWN ARE IN THE EXACT LOCATION INDICATED. NO PRIVATE UTILITIES LOCATED. LOCATES WILL BE THRU IOWA ONE CALL SYSTEM AND WILL BE IN COMPLIANCE WITH SUBSURFACE UTILITY ENGINEERING QUALITY LEVEL "D". UTILITIES WERE ORDERED THRU DESIGN INFORMATION REQUEST PER ONE-CALL DIR TICKET NUMBER 551400923. THE COMPANIES LISTED ON THE TICKET ARE: CITY OF CLIVE, DES MOINES WATER WORKS, IOWA COMMUNICATIONS NETWORK, IOWA HEALTH SYSTEM, IOWA NETWORK SERVICES, MIDAMERICAN ENERGY COMPANY, WINSTREAM MCLEOD, MEDIACOM COMMUNICATIONS CORP, CENTURYLINK LOCAL NETWORK AND THE CITY OF WINDSOR HEIGHTS.

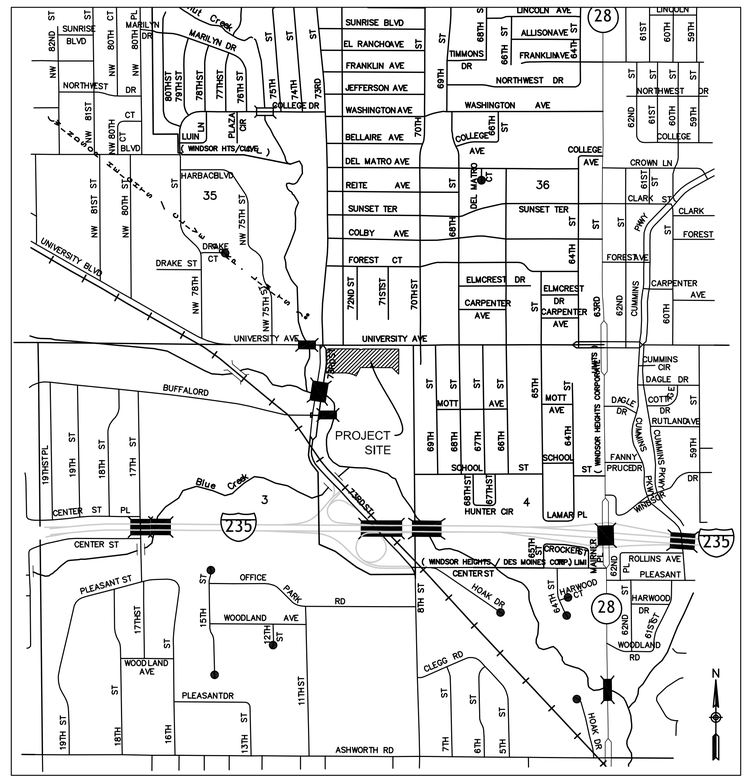

0 1000 2000 Feet

UTILITY COMPANIES:

CITY OF CLIVE
CONTACT NAME: BART WELLER
CONTACT PHONE: 515-223-6231
CONTACT ADDRESS: 1900 NW 114TH ST, CLIVE, IA 50325

DES MOINES WATER WORKS
CONTACT NAME: JANA HODGES OR CHRIS MLYNARIK
CONTACT PHONE: 515-283-8729
CONTACT ADDRESS: 410 FLUER DR, DES MOINES, IA 50321

IOWA COMMUNICATIONS NETWORK
CONTACT NAME: JOEL SCHROEDER
CONTACT PHONE: 800-289-1901
CONTACT ADDRESS: 5255 ROCKWELL DR NE, CEDAR RAPIDS, IA 52402

WINDSTREAM MCLEOD
CONTACT NAME: JOEL SCHROEDER
CONTACT PHONE: 800-289-1901
CONTACT EMAIL: LOCATE.DESK@WINDSTREAM.COM

CENTURYLINK LOCAL NETWORK
CONTACT NAME: TOM STURMER
CONTACT PHONE: 303-664-8090
CONTACT EMAIL: THOMAS.STUMER@CENTURYLINK.COM

IOWA HEALTH SYSTEM
CONTACT NAME: SCOTT HERMANSON
CONTACT PHONE: 319-364-3200
CONTACT EMAIL: SHERMANSON@FIBERUTILITIES.COM

IOWA NETWORK SERVICES
CONTACT NAME: JEFF KLOCKO
CONTACT PHONE: 515-830-0445
CONTACT EMAIL: JEFF@NETINS.COM

MIDAMERICAN ENERGY COMPANY
CONTACT NAME: NORM TRENTMANN
CONTACT PHONE: 515-252-6621
CONTACT EMAIL: NETRENTMANN@MIDAMERICAN.COM

MEDIACOM COMMUNICATIONS CORP.
CONTACT NAME: PAUL MAY
CONTACT PHONE: 515-246-2252
CONTACT EMAIL: PMAY@MEDIACOMCC.COM

CITY OF WINDSOR HEIGHTS
CONTACT NAME: JOHN WIEDMAN
CONTACT PHONE: 515-279-3662
CONTACT EMAIL: JOHNWIEDMAN@NETZERO.COM

IOWA ONE CALL
1-800-292-8989
www.iowaonecall.com
811 Know what's below. Call before you dig.

PRIOR TO THE COMMENCEMENT OF ANY EXCAVATION PLANNED OR SCHEDULED TO OCCUR WITHIN THE STATE OF IOWA, ALL EXCAVATORS (PERSONS PLANNING TO ENGAGE IN ANY FORM OF EXCAVATING) MUST CONTACT THE IOWA ONE CALL NOTIFICATION SYSTEM AND PROVIDE NOTICE OF THE PLANNED EXCAVATION AT LEAST 48-HOURS PRIOR TO THE COMMENCEMENT OF THE PLANNED EXCAVATION - EXCLUDING SATURDAYS, SUNDAYS AND LEGAL HOLIDAYS.

SHEET INDEX

G1.0	TITLE SHEET
C0.1-C0.2	EXISTING SURVEY
CD1.1-CD1.2	SITE DEMOLITION PLAN
C1.1-C1.2	SITE LAYOUT AND DIMENSION PLAN
C2.1-C2.2	SITE UTILITY PLAN
C3.1-C3.2	SITE GRADING AND EROSION CONTROL PLAN
C3.3-C3.4	SITE STORM SEWER PLAN
C3.5-C3.6	SITE STORM WATER FACILITIES MANAGEMENT PLAN
C5.1	SITE DETAILS
C5.2	STORMTECH DETAILS
L1	LANDSCAPE PLAN

OWNER
CHARLES I AND RUTH COLBY NATIONAL DEVELOPMENT TRUST
6581 UNIVERSITY AVENUE
WINDSOR HEIGHTS, IOWA 50324
PHONE: 515-274-3411

MISCELLANEOUS INFORMATION
ADDRESS OF PROPERTY:
7204 UNIVERSITY AVENUE
WINDSOR HEIGHTS, IOWA 50324

CIVIL ENGINEER:
RAKER RHODES CIVIL, LLC
4717 GRAND AVENUE
DES MOINES, IOWA 50312
PHONE: 515-277-0275

LANDSCAPE ARCHITECT:
SIMONSON AND ASSOCIATES ARCHITECTS LLC
1717 INGERSOLL AVENUE SUITE 117
DES MOINES, IOWA 50309
PHONE: 515-440-5626

SURVEYOR:
OLSSON ASSOCIATES
7157 VISTA DRIVE
WEST DES MOINES, IOWA 50266

ZONING: UC - UNIVERSITY AVENUE CORRIDOR MIXED USE
CC - COMMUNITY COMMERCIAL DISTRICT

PROPOSED USE: COMMERCIAL BUILDINGS

AREA OF DEVELOPMENT: 11.94 ACRES (520,149 SQ. FT.)

BUILDING AREA:
TOTAL OF SQUARE FOOTAGE OF BUILDINGS:

WEST BUILDING:	17,825 SQ. FT. (1 STORY)
	12,600 SQ. FT. (1 STORY)
MIDDLE BUILDING:	15,400 SQ. FT. (1 STORY)
EAST BUILDING:	10,500 SQ. FT. (1 STORY)

PARKING PROVIDED:
14 ADA (5 VAN AND 9 CAR ACCESSIBLE SPACES)
301 STANDARD SPACES
315 TOTAL SPACES PROVIDED
302 TOTAL SPACES REQUIRED

NOTE: ADA SPACES TO HAVE BUILDING MOUNTED SIGN

BULK REGULATIONS - UC AND CC:

FRONT YARD	25 FEET
STREET SIDE YARD	25 FEET
INTERIOR SIDE YARD	0 FEET
REAR YARD	10 FEET

BASIS OF BEARING:
IOWA RTN, IOWA STATE PLAN COORDINATE SOUTH

LEGAL DESCRIPTION:
A PARCEL OF LAND LOCATED IN THE NE ¼ OF SECTION 3 AND THE NW ¼ OF SECTION 2, TOWNSHIP 78 NORTH, RANGE 25 WEST OF THE 5TH P.M., CITY OF WINDSOR HEIGHTS, POLK COUNTY, IOWA, MORE PARTICULARLY DESCRIBED AS FOLLOWS:

BEGINNING AT THE SOUTHWEST CORNER OF LOT 6 AND THE NORTHWEST CORNER OF LOT 5, APPLE VALLEY SOUTH OFFICIAL PLAT SAID POINT ALSO BEING ON THE EAST RIGHT-OF-WAY LINE OF 73RD STREET; THENCE NORTH 06°58'52" EAST ALONG SAID EAST RIGHT-OF-WAY LINE AND THE WEST LINE OF SAID LOT 6, A DISTANCE OF 183.47 FEET; THENCE CONTINUING ALONG SAID LINE, NORTH 05°51'45" EAST, A DISTANCE OF 161.04 FEET; THENCE CONTINUING ALONG SAID LINE, NORTH 01°00'56" EAST, A DISTANCE OF 50.40 FEET TO A POINT ON THE WEST LINE OF PARCEL D APPLE VALLEY BEING AN OFFICIAL PLAT, BOOK 6994, PAGE 763; THENCE NORTH 08°47'49" EAST ALONG SAID EAST RIGHT-OF-WAY LINE , A DISTANCE OF 94.42 FEET; THENCE CONTINUING ALONG SAID LINE, NORTH 01°14'05" WEST, A DISTANCE OF 173.23 FEET; THENCE CONTINUING ALONG SAID LINE, SOUTH 89°56'20" EAST, A DISTANCE OF 15.00 FEET; THENCE CONTINUING ALONG SAID LINE, NORTH 00°59'59" WEST, A DISTANCE OF 22.07 FEET TO A POINT ON THE NORTH LINE OF SAID APPLE VALLEY AND THE SOUTH RIGHT-OF-WAY LINE OF UNIVERSITY AVENUE; THENCE SOUTH 89°59'37" EAST ALONG SAID LINE, 437.13 FEET; THENCE CONTINUING ALONG SAID LINE, SOUTH 00°03'40" WEST, A DISTANCE OF 7.00 FEET; THENCE CONTINUING ALONG SAID LINE, SOUTH 89°56'20" EAST, A DISTANCE OF 50.00 FEET; THENCE CONTINUING ALONG SAID LINE, NORTH 00°03'40" EAST, A DISTANCE OF 7.00 FEET; THENCE CONTINUING ALONG SAID LINE, SOUTH 89°56'20" EAST, A DISTANCE OF 515.50 FEET; THENCE CONTINUING ALONG SAID LINE, SOUTH 00°03'40" WEST, A DISTANCE OF 7.00 FEET; THENCE CONTINUING ALONG SAID LINE, SOUTH 89°56'20" EAST, A DISTANCE OF 50.00 FEET; THENCE CONTINUING ALONG SAID LINE, NORTH 00°03'40" EAST, A DISTANCE OF 7.00 FEET TO A FOUND ½" IRON ROD; THENCE CONTINUING ALONG SAID LINE, SOUTH 89°56'20" EAST, A DISTANCE OF 81.70 FEET; THENCE CONTINUING ALONG SAID LINE, NORTH 89°51'53" EAST, A DISTANCE OF 125.66 FEET; THENCE CONTINUING ALONG SAID LINE, SOUTH 00°15'00" EAST, A DISTANCE OF 7.00 FEET; THENCE CONTINUING ALONG SAID LINE, NORTH 89°45'00" EAST, A DISTANCE OF 14.50 FEET TO THE NORTHEAST CORNER OF PARCEL A, APPLE VALLEY; THENCE SOUTH 00°15'00" EAST ALONG THE EAST LINE OF SAID PARCEL A, A DISTANCE OF 169.92 FEET; THENCE CONTINUING ALONG SAID LINE, TO A CURVE CONCAVE NORTHWESTERLY WHOSE RADIUS IS 224.50 FEET, WHOSE ARC LENGTH IS 176.32 FEET, WHOSE CHORD BEARS SOUTH 22°15'01" WEST, A DISTANCE OF 171.82 FEET; THENCE CONTINUING ALONG SAID LINE, SOUTH 45°07'05" WEST, A DISTANCE OF 135.90 FEET; THENCE SOUTH 02°39'04" WEST ALONG THE WEST LINE OF LOT 2, WALNUT VALLEY PLAT 2 BEING AN OFFICIAL PLAT, A DISTANCE OF 47.36 FEET TO A POINT ON THE NORTH LINE OF LOT 1 OF SAID APPLE VALLEY SOUTH; THENCE SOUTH 89°01'51" WEST ALONG SAID LINE, A DISTANCE OF 4.18 FEET; THENCE CONTINUING ALONG SAID LINE, NORTH 45°17'12" WEST, A DISTANCE OF 311.16 FEET TO THE SOUTHWEST CORNER OF SAID PARCEL A AND THE SOUTHEAST CORNER OF PARCEL C, APPLE VALLEY BEING A FOUND ½" IRON PIPE WITH YELLOW PLASTIC CAP LS #3169; THENCE NORTH 89°50'53" WEST ALONG THE SOUTH LINE OF SAID PARCEL C, A DISTANCE OF 440.65 FEET TO THE SOUTHWEST CORNER OF SAID PARCEL C AND ON A CURVE CONCAVE NORTHWESTERLY WHOSE RADIUS IS 314.40 FEET, WHOSE ARC LENGTH IS 31.79 FEET, WHOSE CHORD BEARS SOUTH 24°08'34" WEST, A DISTANCE OF 31.78 FEET; THENCE CONTINUING ALONG SAID LINE, SOUTH 26°33'30" WEST, A DISTANCE OF 100.40 FEET TO A CURVE CONCAVE SOUTHWESTERLY WHOSE RADIUS IS 344.89 FEET, WHOSE ARC LENGTH IS 158.36 FEET, WHOSE CHORD BEARS NORTH 74°07'07" WEST, A DISTANCE OF 156.97 FEET TO THE NORTHEAST CORNER OF LOT 6, APPLE VALLEY SOUTH; THENCE SOUTH 00°58'15" EAST ALONG THE EAST LINE OF SAID LOT 6, A DISTANCE OF 398.53 FEET TO THE SOUTHEAST CORNER OF SAID LOT 6, AND THE NORTH LINE OF LOT 5, APPLE VALLEY SOUTH, BEING A FOUND PK NAIL; THENCE NORTH 89°56'12" WEST ALONG THE SOUTH LINE OF SAID LOT 6 AND THE NORTH LINE OF SAID LOT 5, A DISTANCE OF 309.95 FEET TO THE POINT OF BEGINNING. SAID TRACT OF LAND CONTAINS 520,149.26 SQUARE FEET (11.94 ACRES) MORE OR LESS.

LICENSED PROFESSIONAL ENGINEER
STEPHEN C. MOSELEY
17308
IOWA

I HEREBY CERTIFY THAT THIS ENGINEERING DOCUMENT WAS PREPARED BY ME OR UNDER MY DIRECT PERSONAL SUPERVISION AND THAT I AM A DULY LICENSED PROFESSIONAL ENGINEER UNDER THE LAWS OF THE STATE OF IOWA.

STEPHEN C. MOSELEY, P.E. IOWA LICENSE NO. 17308 DATE

MY LICENSE RENEWAL DATE IS DECEMBER 31, 2015

PAGES OR SHEETS COVERED BY THIS SEAL:
ALL CIVIL SHEETS.

RAKER RHODES Civil
Des Moines, Iowa | Iowa City, Iowa www.rakerrhodes.com

This drawing has been prepared by the Engineer under the Engineer's direct supervision. This drawing is provided as an instrument of service. The Designer / Engineer and is intended for use on this project only. Any reproduction, use, or distribution of information contained herein without the prior written consent of the Engineer is strictly prohibited. (C) Copyright 2014 by Raker Rhodes Civil.

Charles I and Ruth Colby National Development Trust
MidTown Center
Windsor Heights, IA

No.	Description	Date
1	Revised as per City Comments	02/17/2015
2	Revised as per City Comments	07/27/2015
3	Revised as per City Comments	08/13/2015

Date 02/17/2015

Job No. RRC14006 Proj. Mgr. SCM

Sheet Title
Title Sheet

Sheet No.
G1.0

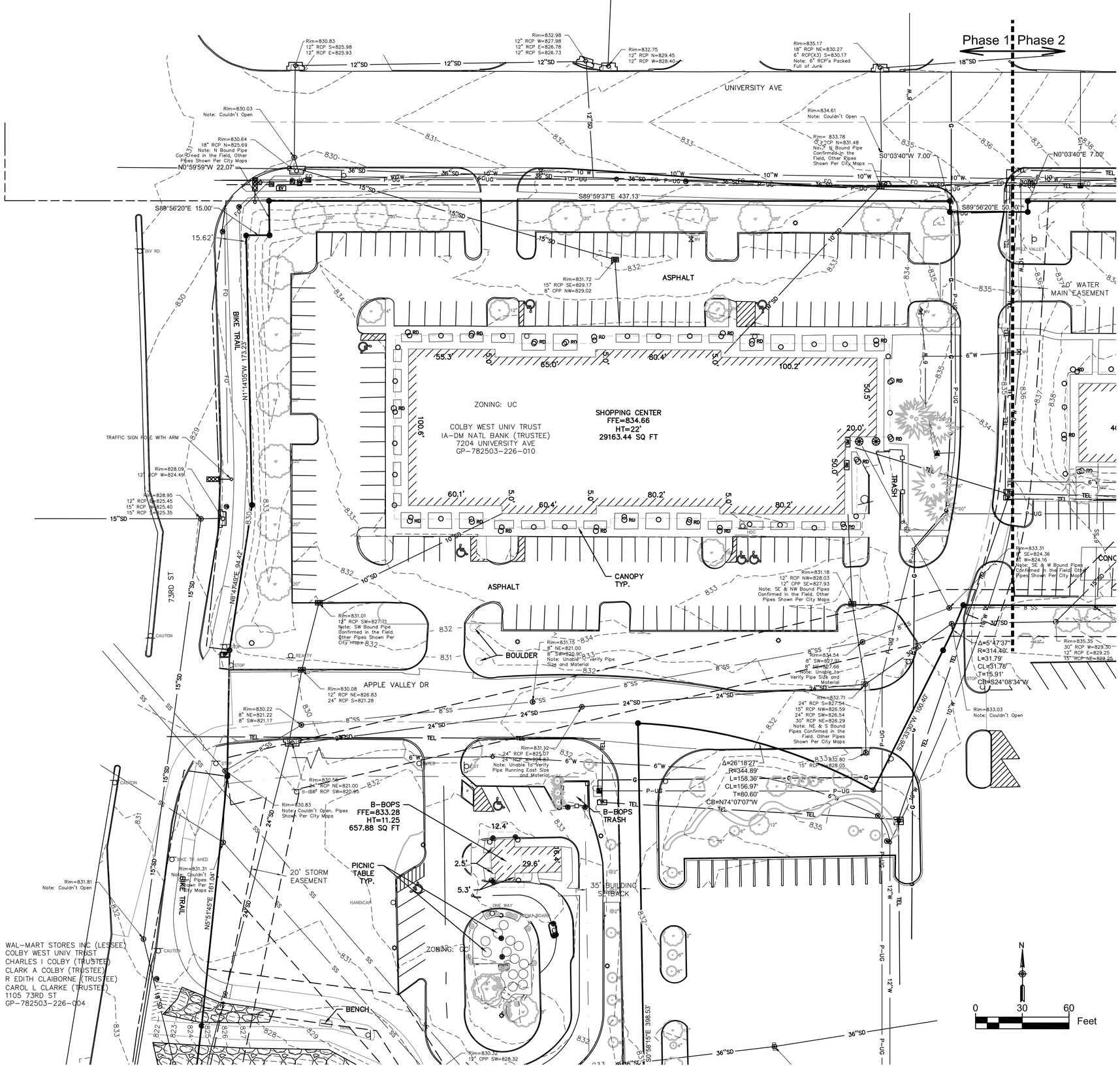

LEGEND

- BOUNDARY
- PROPERTY LINE
- EASEMENT
- BUILDING SETBACK
- CENTERLINE
- RIGHT-OF-WAY LINE
- TOP OF BANK
- TOE OF SLOPE
- 890 MAJOR CONTOUR
- 889 MINOR CONTOUR
- SS SANITARY SEWER
- SD STORM SEWER
- G UNDERGROUND GAS
- W UNDERGROUND WATER
- P-UG UNDERGROUND ELECTRIC
- TEL UNDERGROUND TELEPHONE
- WOOD FENCE
- UTILITY BREAKLINE
- BUILDING HATCH
- RIP-RAP HATCH
- FOUND MONUMENT
- SET MONUMENT
- BENCHMARK
- GRATE INLET
- BEEHIVE
- STORM SEWER MANHOLE
- CURB INLET
- FLARED END SECTION
- ROOF DRAIN
- SANITARY SEWER MANHOLE
- LIGHT POLE
- TRAFFIC SIGNAL WITH ARM
- ELECTRIC VAULT
- AIR CONDITIONER
- TRANSFORMER
- TELEPHONE PEDESTAL
- TRAFFIC SIGNAL BOX
- TRAFFIC CONTROL BOX
- TRAFFIC SIGNAL MANHOLE
- FIBER OPTIC BOX
- FIRE HYDRANT
- WV WATER VALVE
- WATER MANHOLE
- GV GAS VALVE
- GAS METER
- SIGN
- COLUMN 2.5' TYPICAL
- BOLLARD
- DECIDUOUS TREE
- CONIFEROUS TREE
- BUSH
- FOUND 1/2" REBAR (UNLESS OTHERWISE DESCRIBED)
- FOUND 1/2" IRON PIPE WITH YELLOW PLASTIC CAP #3169 (UNLESS OTHERWISE DESCRIBED)
- FOUND CHISELED 'X'
- SET 5/8" REBAR WITH RED PLASTIC CAP LS #15982
- (M) MEASURED DISTANCE
- (P) PLATTED DISTANCE

NOTE: ALL BUILDING MEASUREMENTS AT US SURVEY FOOT FROM THE OUTSIDE OF FINISHED WALL SURFACE 3'± ABOVE GROUND LEVEL.

RAKER RHODES Civil
Des Moines, Iowa | Iowa City, Iowa www.rakerrhodes.com

This drawing has been prepared by the Engineer under the Engineer's direct supervision. This drawing is provided as an instrument of service to the Designer / Engineer and is intended for use on this project only. Any reproduction, use, or distribution of information contained herein without the prior written consent of the Engineer is strictly prohibited. © Copyright 2014 by Raker Rhodes Civil.

Charles I and Ruth Colby National Development Trust MidTown Center

Windsor Heights, IA

No.	Description	Date
1	Revised as per City Comments	02/17/2015
2	Revised as per City Comments	07/27/2015
3	Revised as per City Comments	08/13/2015

Date 02/17/2015

Job No. RRC14006 Proj. Mgr. SCM

Sheet Title: Existing Survey

Sheet No. C0.1

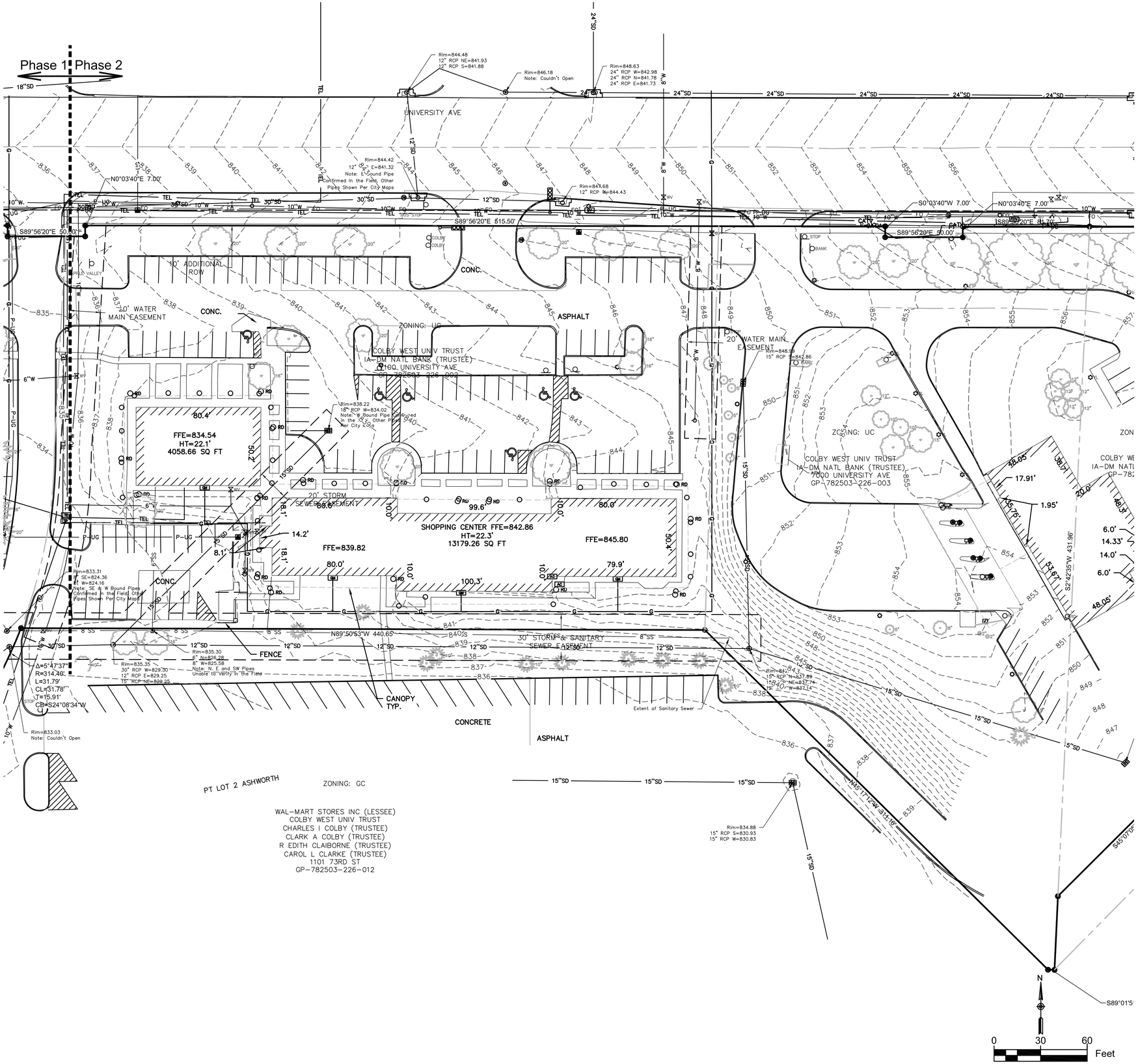

LEGEND

- BOUNDARY
- PROPERTY LINE
- EASEMENT
- BUILDING SETBACK
- CENTERLINE
- RIGHT-OF-WAY LINE
- TOP OF BANK
- TOE OF SLOPE
- 890 MAJOR CONTOUR
- 889 MINOR CONTOUR
- SS SANITARY SEWER
- SD STORM SEWER
- G UNDERGROUND GAS
- W UNDERGROUND WATER
- P-UG UNDERGROUND ELECTRIC
- TEL UNDERGROUND TELEPHONE
- WOOD FENCE
- UTILITY BREAKLINE
- BUILDING HATCH
- RIP-RAP HATCH
- FOUND MONUMENT
- SET MONUMENT
- BENCHMARK
- GRATE INLET
- BEEHIVE
- STORM SEWER MANHOLE
- CURB INLET
- FLARED END SECTION
- ROOF DRAIN
- SANITARY SEWER MANHOLE
- LIGHT POLE
- TRAFFIC SIGNAL WITH ARM
- ELECTRIC VAULT
- AIR CONDITIONER
- TRANSFORMER
- TELEPHONE PEDESTAL
- TRAFFIC SIGNAL BOX
- TRAFFIC CONTROL BOX
- TRAFFIC SIGNAL MANHOLE
- FIBER OPTIC BOX
- FIRE HYDRANT
- WV WATER VALVE
- WATER MANHOLE
- GV GAS VALVE
- GAS METER
- SIGN
- COLUMN 2.5' TYPICAL
- BOLLARD
- DECIDUOUS TREE
- CONIFEROUS TREE
- BUSH
- FOUND 1/2" REBAR (UNLESS OTHERWISE DESCRIBED)
- FOUND 1/2" IRON PIPE WITH YELLOW PLASTIC CAP #3169 (UNLESS OTHERWISE DESCRIBED)
- FOUND CHISELED 'X'
- SET 5/8" REBAR WITH RED PLASTIC CAP LS #15982
- (M) MEASURED DISTANCE
- (P) PLATTED DISTANCE

NOTE: ALL BUILDING MEASUREMENTS AT US SURVEY FOOT FROM THE OUTSIDE OF FINISHED WALL SURFACE 3'± ABOVE GROUND LEVEL.

RAKER RHODES Civil
Des Moines, Iowa | Iowa City, Iowa
www.rakerrhodes.com

This drawing has been prepared by the Engineer under the Engineer's direct supervision. This drawing is provided as an instrument of service. The Designer / Engineer and is intended for use on this project only. Any reproduction, use, or distribution of information contained herein without the prior written consent of the Engineer is strictly prohibited. (C) Copyright 2014 by Raker Rhodes Civil.

Charles I and Ruth Colby National Development Trust MidTown Center

Windsor Heights, IA

No.	Description	Date
1	Revised as per City Comments	02/17/2015
2	Revised as per City Comments	07/27/2015
3	Revised as per City Comments	08/13/2015

Date
02/17/2015

Job No. RRC14006
Proj. Mgr. SCM

Sheet Title
Existing Survey

Sheet No.
C0.2

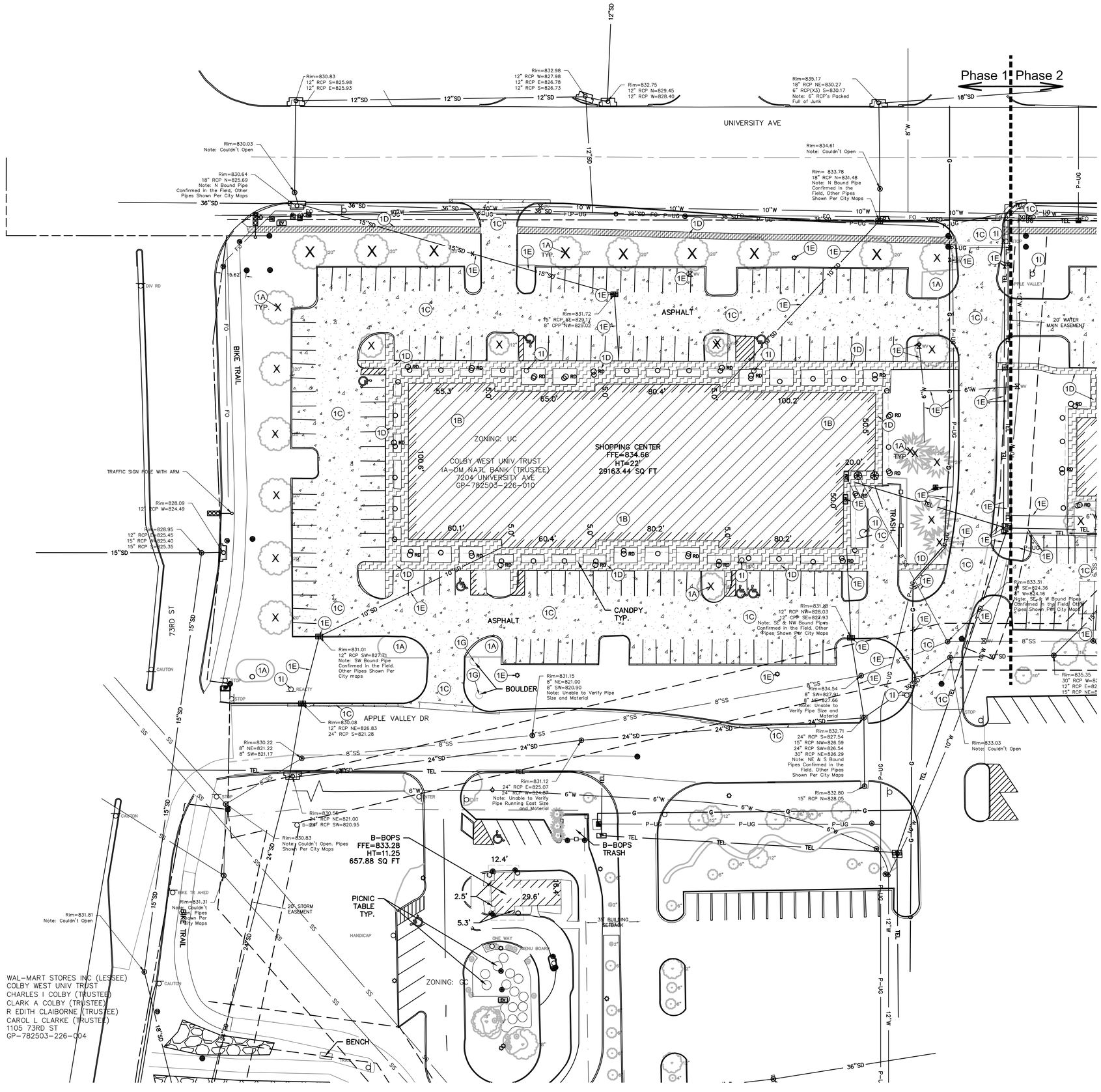

DEMOLITION PLAN NOTES

1. DEMOLITION ITEMS TO BE REMOVED AS FOLLOWS:
   A. REMOVE TREE/BRUSH. GROUND STUMP TO 2' BELOW EXISTING SURFACE.
   B. REMOVE BUILDING AND ALL STRUCTURAL ITEMS AS SCHEDULED FOR DEMOLITION.
   C. REMOVE PAVEMENT AS SHOWN. SAW-CUT TO FULL DEPTH ON PAVEMENT REMOVALS.
   D. REMOVE SIDEWALK AS SHOWN. SAW-CUT TO FULL DEPTH ON SIDEWALK REMOVALS.
   E. REMOVE UTILITY LINE AND/OR STRUCTURE TO LIMITS SHOWN.
   F. CAP EXISTING UTILITY LINE TO REMAIN.
   G. REMOVE BOULDER. CONTRACTOR TO COORDINATE DISPOSAL OR RELOCATION WITH OWNER.
   H. ROOF DRAINS FROM DEMOLISHED BUILDINGS ARE TO BE FULLY REMOVED.
   I. REMOVE SIGN AS SHOWN AND FURNISH TO OWNER.
   J. REMOVE AND RELOCATE ATM MACHINE AND ELECTRICAL COMPONENTS.
2. PROTECT ALL EXISTING FEATURES NOT SCHEDULED FOR DEMOLITION OR REMOVAL.
3. CONTRACTOR SHALL CONTACT ALL FRANCISE UTILITY PROVIDERS PRIOR TO THE START OF DEMOLITION ACTIVITIES.
4. DISPOSAL OF CONSTRUCTION DEBRIS AT THIS LOCATION IS NOT ALLOWED. CONTRACTOR SHALL REMOVE AND TRANSPORT ALL MATERIALS NOT REMAINING AS PART OF THE PROJECT TO AN APPROVED OFF-SITE WASTE FACILITY. SITE CONTRACTOR SHALL REMOVE ALL DEBRIS AND CONSTRUCTION MATERIALS SPILLED ON ADJACENT PROPERTIES WITHIN 48 HOURS OF SPILL.
5. TRACKING OF MATERIALS OFF-SITE IS PROHIBITED. CONTRACTOR SHALL PROMPTLY CLEAN UP ANY MATERIAL TRACKED OFF-SITE AND PROVIDE ADDITIONAL SEDIMENT CONTROL MEASURES TO PREVENT SEDIMENT FROM LEAVING THE CONSTRUCTION SITE.

DEMO LEGEND

X TREE/BRUSH REMOVAL SYMBOL

BUILDING AND ALL STRUCTURAL REMOVAL

PAVEMENT REMOVAL LIMITS

SIDEWALK REMOVAL LIMITS

X UTILITY REMOVAL LIMITS

N

0 30 60 Feet

RAKER RHODES Civil
Des Moines, Iowa | Iowa City, Iowa
www.rakerrhodes.com

This drawing has been prepared by the Engineer under the Engineer's direct supervision. This drawing is provided as an instrument of service to the Designer / Engineer and is intended for use on this project only. Any reproduction, use, or distribution of information contained herein without the prior written consent of the Engineer is strictly prohibited. © Copyright 2014 by Raker Rhodes Civil.

Charles I and Ruth Colby
National Development Trust
MidTown Center
Windsor Heights, IA

No.	Description	Date
1	Revised as per City Comments	02/17/2015
2	Revised as per City Comments	07/27/2015
3	Revised as per City Comments	08/13/2015

Date
02/17/2015

Job No. RRC14006
Proj. Mgr. SCM

Sheet Title
Site Demolition Plan

Sheet No.
CD1.1

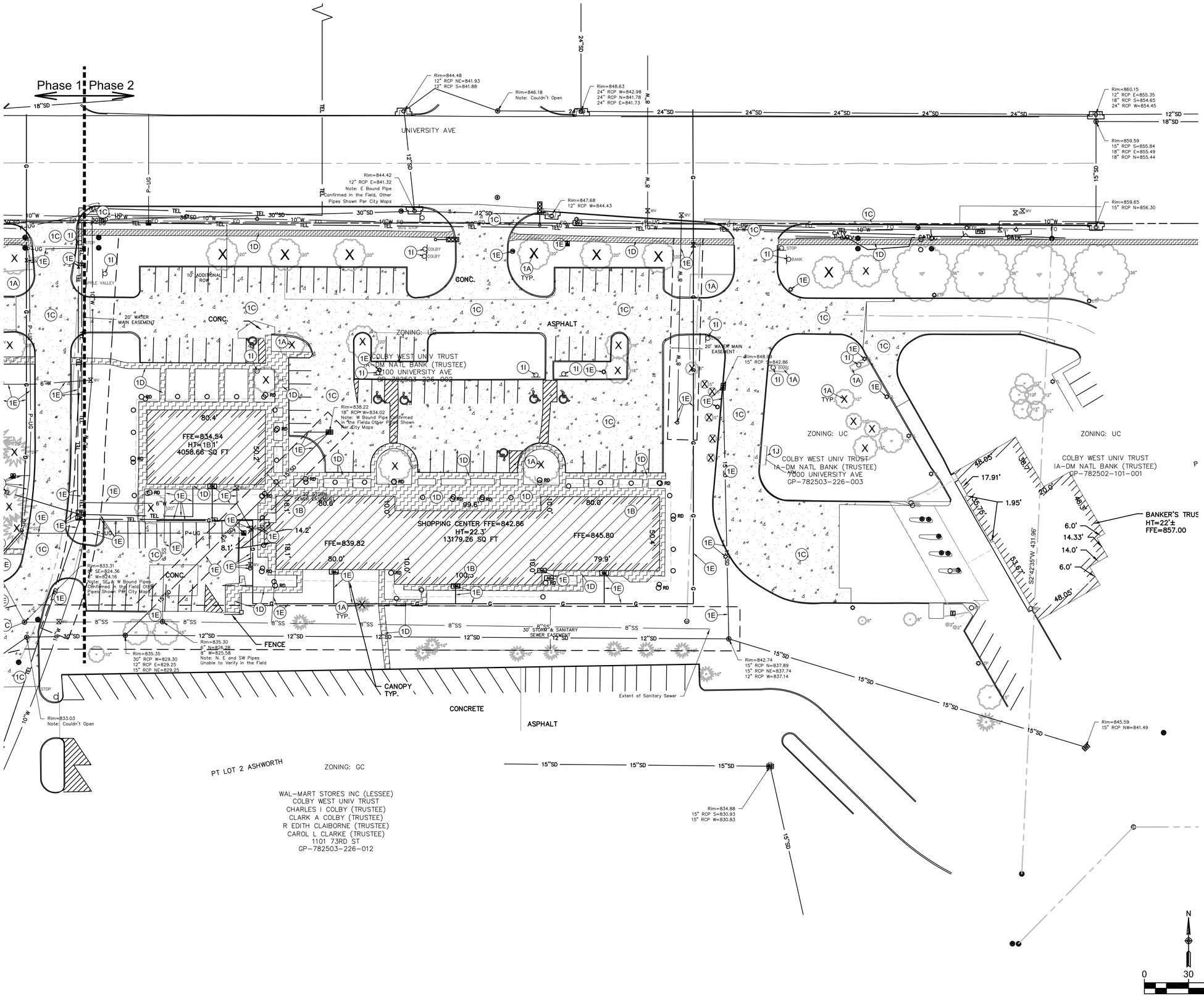

DEMOLITION PLAN NOTES

1. DEMOLITION ITEMS TO BE REMOVED AS FOLLOWS:
   A. REMOVE TREE/BRUSH. GROUND STUMP TO 2' BELOW EXISTING SURFACE.
   B. REMOVE BUILDING AND ALL STRUCTURAL ITEMS AS SCHEDULED FOR DEMOLITION.
   C. REMOVE PAVEMENT AS SHOWN. SAW-CUT TO FULL DEPTH ON PAVEMENT REMOVALS.
   D. REMOVE SIDEWALK AS SHOWN. SAW-CUT TO FULL DEPTH ON SIDEWALK REMOVALS.
   E. REMOVE UTILITY LINE AND/OR STRUCTURE TO LIMITS SHOWN.
   F. CAP EXISTING UTILITY LINE TO REMAIN.
   G. REMOVE BOULDER. CONTRACTOR TO COORDINATE DISPOSAL OR RELOCATION WITH OWNER.
   H. ROOF DRAINS FROM DEMOLISHED BUILDINGS ARE TO BE FULLY REMOVED.
   I. REMOVE SIGN AS SHOWN AND FURNISH TO OWNER.
   J. REMOVE AND RELOCATE ATM MACHINE AND ELECTRICAL COMPONENTS.
2. PROTECT ALL EXISTING FEATURES NOT SCHEDULED FOR DEMOLITION OR REMOVAL.
3. CONTRACTOR SHALL CONTACT ALL FRANCISE UTILITY PROVIDERS PRIOR TO THE START OF DEMOLITION ACTIVITIES.
4. DISPOSAL OF CONSTRUCTION DEBRIS AT THIS LOCATION IS NOT ALLOWED. CONTRACTOR SHALL REMOVE AND TRANSPORT ALL MATERIALS NOT REMAINING AS PART OF THE PROJECT TO AN APPROVED OFF-SITE WASTE FACILITY. SITE CONTRACTOR SHALL REMOVE ALL DEBRIS AND CONSTRUCTION MATERIALS SPILLED ON ADJACENT PROPERTIES WITHIN 48 HOURS OF SPILL.
5. TRACKING OF MATERIALS OFF-SITE IS PROHIBITED. CONTRACTOR SHALL PROMPTLY CLEAN UP ANY MATERIAL TRACKED OFF-SITE AND PROVIDE ADDITIONAL SEDIMENT CONTROL MEASURES TO PREVENT SEDIMENT FROM LEAVING THE CONSTRUCTION SITE.

DEMO LEGEND

X TREE/BRUSH REMOVAL SYMBOL

BUILDING AND ALL STRUCTURAL REMOVAL

PAVEMENT REMOVAL LIMITS

SIDEWALK REMOVAL LIMITS

X UTILITY REMOVAL LIMITS

RAKER RHODES Civil
Des Moines, Iowa | Iowa City, Iowa
www.rakerrhodes.com

This drawing has been prepared by the Engineer under the Engineer's direct supervision. This drawing is provided as an instrument of service to the Designer / Engineer and is intended for use on this project only. Any reproduction, use, or distribution of information contained herein without the prior written consent of the Engineer is strictly prohibited. © Copyright 2014 by Raker Rhodes Civil.

Charles I and Ruth Colby
National Development Trust
MidTown Center
Windsor Heights, IA

No.	Description	Date
1	Revised as per City Comments	02/17/2015
2	Revised as per City Comments	07/27/2015
3	Revised as per City Comments	08/13/2015

Date
02/17/2015

Job No. RRC14006
Proj. Mgr. SCM

Sheet Title
Site Demolition Plan

Sheet No.
CD1.2

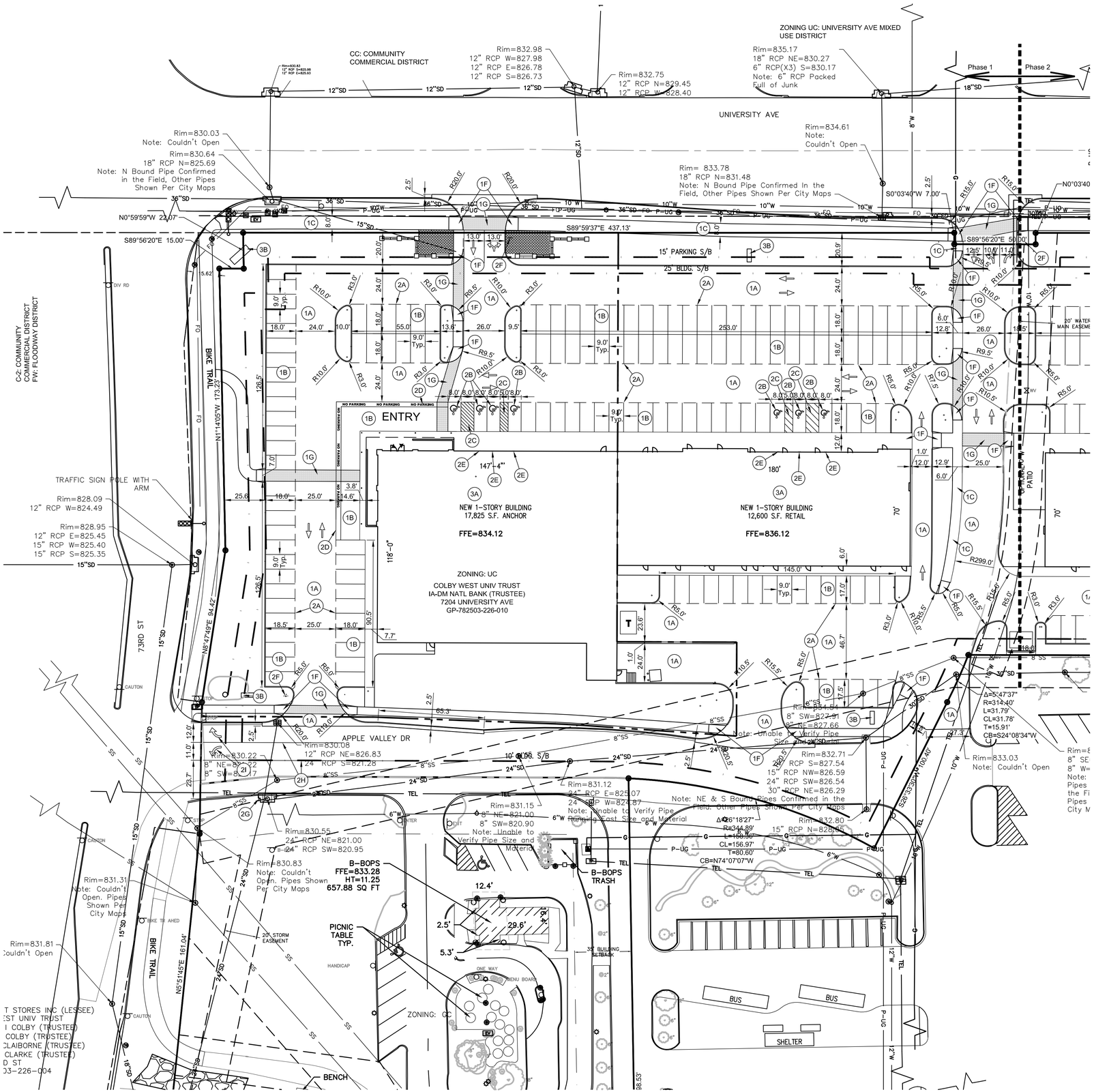

DIMENSION PLAN NOTES

1. PAVEMENTS, PROVIDE THE FOLLOWING:
   A. 7" PCC PAVING ON 12" SUBGRADE COMPACTED TO 95% STANDARD PROCTOR DENSITY.
   B. 6" PCC PAVING ON 12" SUBGRADE COMPACTED TO 95% STANDARD PROCTOR DENSITY.
   C. 5" PCC SIDEWALK ON 12" SUBGRADE COMPACTED TO 95% STANDARD PROCTOR DENSITY.
   D. 6" PCC CURB.
   E. FLUSH, NO CURB.
   F. PEDESTRIAN RAMP.
   G. 7" PCC PAVING WITH INTEGRAL TERRA COTTA COLOR ON 12" SUBGRADE COMPACTED TO 95% STANDARD PROCTOR DENSITY.
2. PAVEMENT MARKINGS AND SIGNAGE, PROVIDE THE FOLLOWING:
   A. PAINTED PARKING STALL LINES.
   B. STATE OF IOWA APPROVED ACCESSIBLE SYMBOL.
   C. 45° STRIPING AT 3' ON CENTER.
   D. NO PARKING TEXT AND STRIPING.
   E. A BLUE SIGN WITH ACCESSIBLE SYMBOL READING "PARKING ONLY" AND "$100 FINE FOR IMPROPER USE", AS WELL AS AN ADDITIONAL SIGN READING "VAN ACCESSIBLE". SECURE ACCESSIBLE SIGNS TO BUILDING WITH WALL MOUNTS.
   F. R1-1 "STOP" SIGN ON STEEL POST IN CONCRETE BASE.
   G. R3-2 "NO LEFT TURN" SIGN ON STEEL POST IN CONCRETE BASE.
   H. TURN LANE PAVEMENT MARKING.
   I. DIRECTIONAL ARROW PAVEMENT MARKING.
3. PROPOSED BUILDING FEATURES, PROVIDE THE FOLLOWING:
   A. PROPOSED BUILDING. SEE ARCHITECTURAL AND STRUCTURAL PLANS FOR DETAILED INFORMATION.
   B. PROPOSED MONUMENT SIGN. SEE ARCHITECTURAL PLANS FOR DETAILED INFORMATION.

RAKER RHODES
Civil
Des Moines, Iowa | Iowa City, Iowa
www.rakerrhodes.com

This drawing has been prepared by the Engineer under the Engineer's direct supervision. This drawing is provided as an instrument of service by the Designer / Engineer and is intended for use on this project only. Any reproduction, use, or disclosure of information contained herein without the prior written consent of the Engineer is strictly prohibited. © Copyright 2014 by Raker Rhodes Civil.

Charles I and Ruth Colby National Development Trust MidTown Center

Windsor Heights, IA

No.	Description	Date
1	Revised as per City Comments	02/17/2015
2	Revised as per City Comments	07/27/2015
3	Revised as per City Comments	08/13/2015

Date
02/17/2015

Job No. RRC14006
Proj. Mgr. SCM

Sheet Title
Site Layout and Dimension Plan

Sheet No.
C1.1

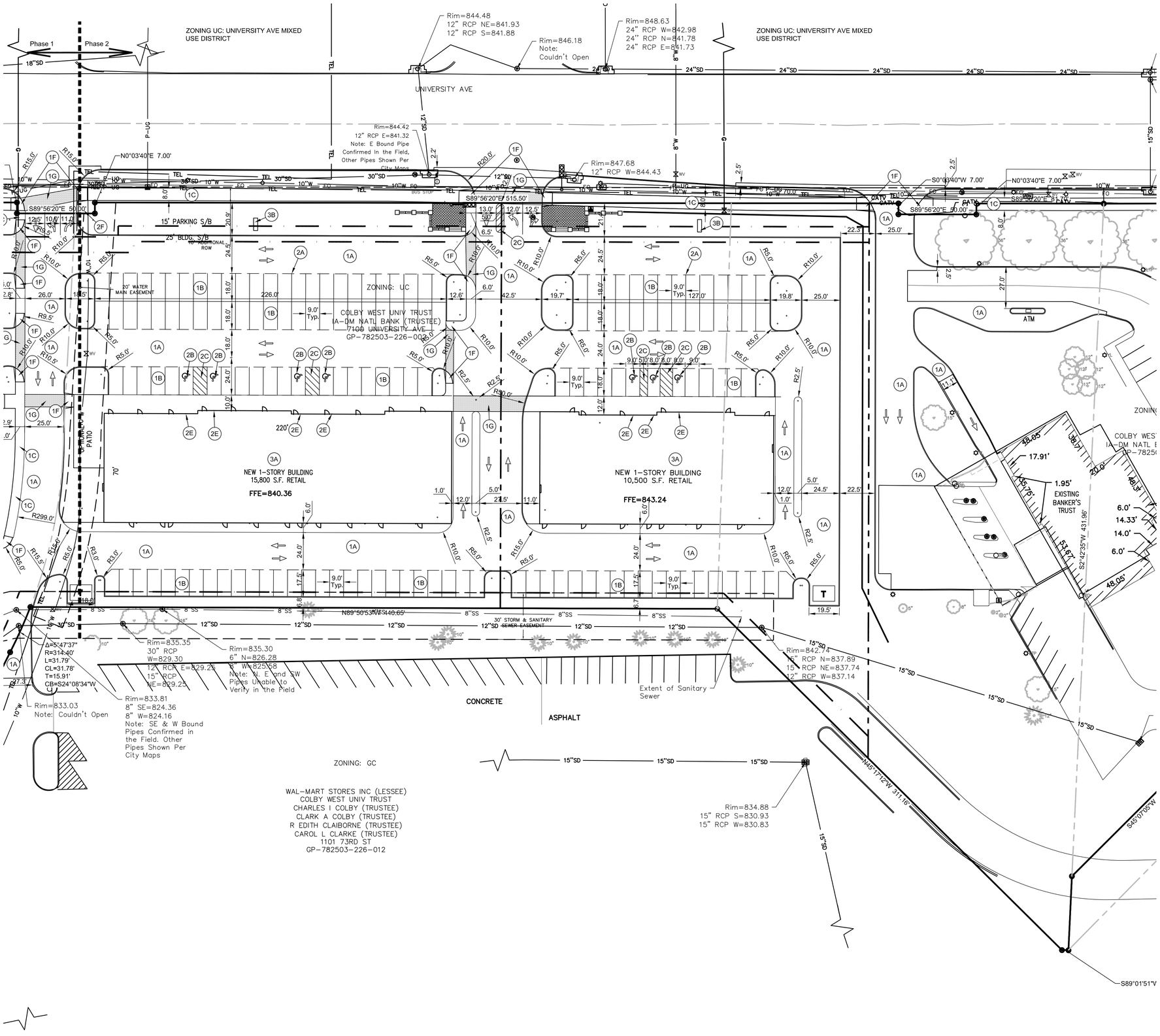

DIMENSION PLAN NOTES

1. PAVEMENTS, PROVIDE THE FOLLOWING:
   A. 7" PCC PAVING ON 12" SUBGRADE COMPACTED TO 95% STANDARD PROCTOR DENSITY.
   B. 6" PCC PAVING ON 12" SUBGRADE COMPACTED TO 95% STANDARD PROCTOR DENSITY.
   C. 5" PCC SIDEWALK ON 12" SUBGRADE COMPACTED TO 95% STANDARD PROCTOR DENSITY.
   D. 6" PCC CURB.
   E. FLUSH, NO CURB.
   F. PEDESTRIAN RAMP.
   G. 7" PCC PAVING WITH INTEGRAL TERRA COTTA COLOR ON 12" SUBGRADE COMPACTED TO 95% STANDARD PROCTOR DENSITY.
2. PAVEMENT MARKINGS AND SIGNAGE, PROVIDE THE FOLLOWING:
   A. PAINTED PARKING STALL LINES.
   B. STATE OF IOWA APPROVED ACCESSIBLE SYMBOL.
   C. 45° STRIPING AT 3' ON CENTER.
   D. NO PARKING TEXT AND STRIPING.
   E. A BLUE SIGN WITH ACCESSIBLE SYMBOL READING "PARKING ONLY" AND "$100 FINE FOR IMPROPER USE", AS WELL AS AN ADDITIONAL SIGN READING "VAN ACCESSIBLE". SECURE ACCESSIBLE SIGNS TO BUILDING WITH WALL MOUNTS.
   F. R1-1 "STOP" SIGN ON STEEL POST IN CONCRETE BASE.
   G. R3-2 "NO LEFT TURN" SIGN ON STEEL POST IN CONCRETE BASE.
   H. TURN LANE PAVEMENT MARKING.
   I. DIRECTIONAL ARROW PAVEMENT MARKING.
3. PROPOSED BUILDING FEATURES, PROVIDE THE FOLLOWING:
   A. PROPOSED BUILDING. SEE ARCHITECTURAL AND STRUCTURAL PLANS FOR DETAILED INFORMATION.
   B. PROPOSED MONUMENT SIGN. SEE ARCHITECTURAL PLANS FOR DETAILED INFORMATION.

RAKER RHODES
Civil
Des Moines, Iowa | Iowa City, Iowa
www.rakerrhodes.com

This drawing has been prepared by the Engineer under the direct Engineer's direct supervision. This drawing is provided as an instrument of service to the Designer / Engineer and is intended for use on this project only. Any reproduction, use, or distribution of information contained herein without the prior written consent of the Engineer is strictly prohibited. © Copyright 2014 by Raker Rhodes Civil.

Charles I and Ruth Colby National Development Trust MidTown Center

Windsor Heights, IA

No.	Description	Date
1	Revised as per City Comments	02/17/2015
2	Revised as per City Comments	07/27/2015
3	Revised as per City Comments	08/13/2015

Date
02/17/2015

Job No. RRC14006
Proj. Mgr. SCM

Sheet Title
Site Layout and Dimension Plan

Sheet No.
C1.2

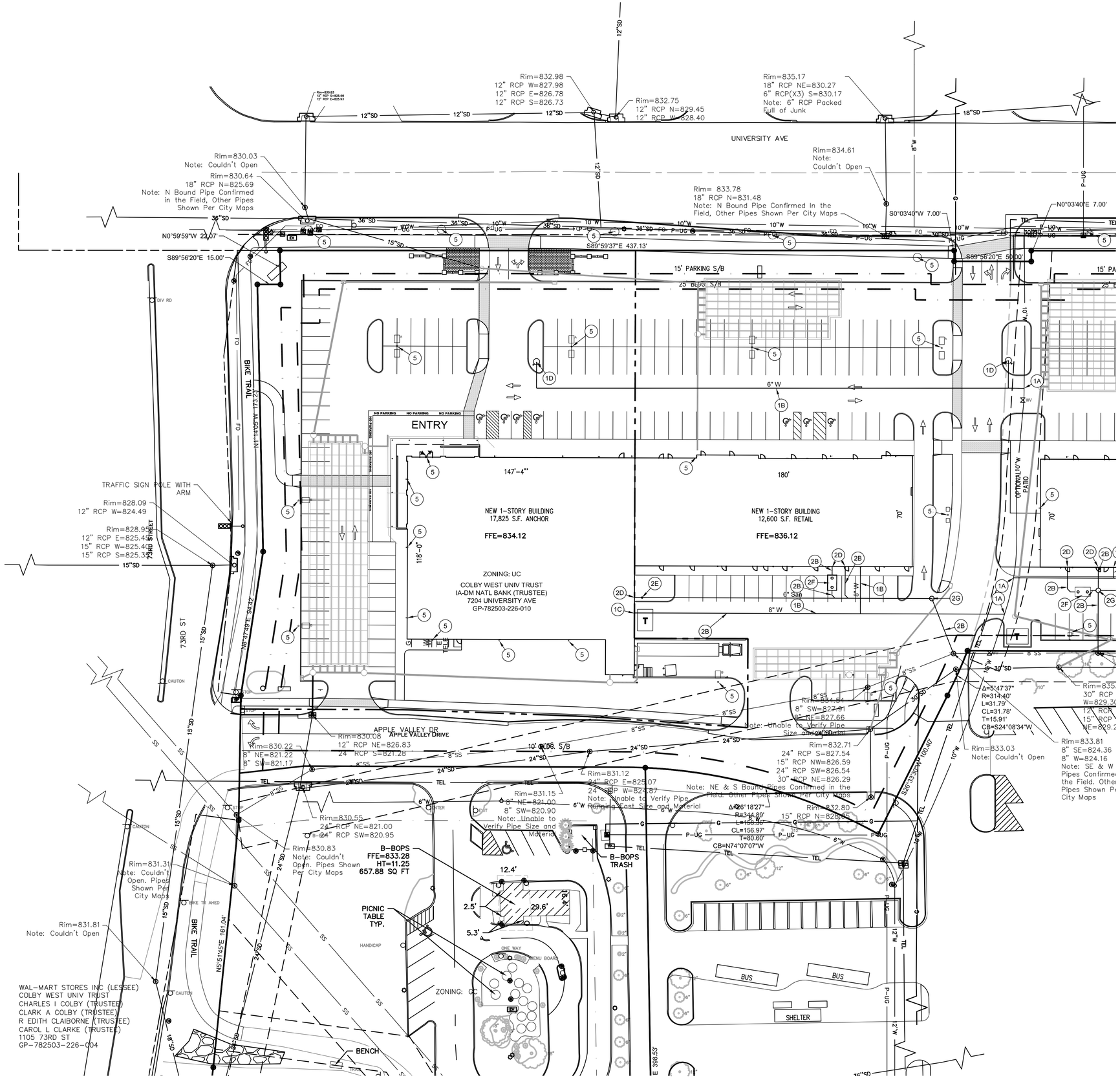

UTILITY CONSTRUCTION NOTES

ALL PROPOSED IMPROVEMENTS SHALL CONFORM TO THE LATEST SUDAS STANDARDS.

1. WATER SERVICE, PROVIDE THE FOLLOWING:
   - A. CONNECT TO EXISTING WATER SERVICE LINE. CONTRACTOR TO FIELD VERIFY THE LOCATION AND DEPTH OF EXISTING SERVICE LINE PRIOR TO CONSTRUCTION.
   - B. 8-INCH WATER LINE AT 5.5' MINIMUM DEPTH.
   - C. CONNECT TO BUILDING WATER SERVICE LINE. CONTRACTOR TO COORDINATE WITH MECHANICAL PLANS.
   - D. HYDRANT ASSEMBLY.
   - E. WATER VALVE.

2. SANITARY SEWER, PROVIDE THE FOLLOWING:
   - A. CONNECT TO EXISTING SANITARY SEWER.
   - B. 6-INCH PVC SANITARY SEWER SERVICE LINE TO BE INSTALLED AT A MINIMUM 2% SLOPE. CONTRACTOR TO VERIFY CONNECTION ELEVATION AND SERVICE LINE SLOPE PRIOR TO INSTALLATION.
   - C. 4-INCH PVC SANITARY SEWER SERVICE LINE TO BE INSTALLED AT A MINIMUM 2% SLOPE. CONTRACTOR TO VERIFY CONNECTION ELEVATION AND SERVICE LINE SLOPE PRIOR TO INSTALLATION.
   - D. CONNECT TO BUILDING SANITARY SEWER SERVICE LINE. CONTRACTOR TO COORDINATE WITH MECHANICAL PLANS.
   - E. SANITARY SEWER CLEANOUT WITH CONCRETE COLLAR.
   - F. GREASE INTERCEPTOR. SEE MECHANICAL PLANS FOR MORE INFORMATION.
   - G. SANITARY SEWER MANHOLE. CONTRACTOR TO VERIFY EXACT SIZE, LOCATION AND INVERTS PRIOR TO CONSTRUCTION.

3. GAS LINE, ADJUST THE FOLLOWING:
   - A. CONNECT TO EXISTING GAS MAIN.
   - B. CONNECT TO BUILDING GAS SERVICE SYSTEM. SEE MECHANICAL PLANS FOR CONTINUATION.
   - C. GAS MAIN.

4. ELECTRICAL SERVICE, PROVIDE THE FOLLOWING:
   - A. CONNECT TO EXISTING ELECTRICAL SERVICE LINE. SEE MECHANICAL AND ELECTRICAL PLANS FOR EXACT ROUTING AND MORE DETAILED INFORMATION.
   - B. MONUMENT SIGN. SEE ARCHITECTURAL AND ELECTRICAL FOR EXACT LOCATION AND ELECTRICAL ROUTING PRIOR TO CONSTRUCTION.
   - C. ELECTRICAL CONDUIT ROUTING. SEE MECHANICAL AND ELECTRICAL PLANS PRIOR TO CONSTRUCTION TO VERIFY EXACT ROUTING AND MORE DETAILED INFORMATION.
   - D. EXISTING ELECTRICAL LINE.
   - E. PROPOSED ELECTRICAL LINE. VERIFY EXACT SIZE AND ROUTING WITH ELECTRICAL AND MECHANICAL PLANS PRIOR TO CONSTRUCTION.
   - F. PROPOSED TRANSFORMER. VERIFY EXACT SIZE AND LAYOUT WITH ELECTRICAL AND MECHANICAL PLAN PRIOR TO CONSTRUCTION.
   - G. CONNECT TO BUILDING ELECTRICAL LINE. VERIFY SIZE AND ROUTING WITH MECHANICAL AND ELECTRICAL PLANS PRIOR TO CONSTRUCTION.

5. SITE LIGHTING. THE SITE LIGHTING SHOWN IS FOR DESIGN LAYOUT ONLY. SEE SITE LIGHTING PLAN FOR EXACT LIGHTING LAYOUT AND ROUTING OF ELECTRICAL LINES AND SPECIFICATIONS PRIOR TO CONSTRUCTION.

RAKER RHODES Civil
Des Moines, Iowa | Iowa City, Iowa
www.rakerrhodes.com

This drawing has been prepared by the Engineer under the Engineer's direct supervision. This drawing is provided as an instrument of service by the Designer / Engineer and is intended for use on this project only. Any reproduction, use, or distribution of information contained herein without the prior written consent of the Engineer is strictly prohibited. © Copyright 2014 by Raker Rhodes Civil.

Charles I and Ruth Colby National Development Trust MidTown Center

Windsor Heights, IA

No.	Description	Date
1	Revised as per City Comments	02/17/2015
2	Revised as per City Comments	07/27/2015
3	Revised as per City Comments	08/13/2015

Date: 02/17/2015

Job No. RRC14006 | Proj. Mgr. SCM

Sheet Title: Site Utility Plan

Sheet No. C2.1

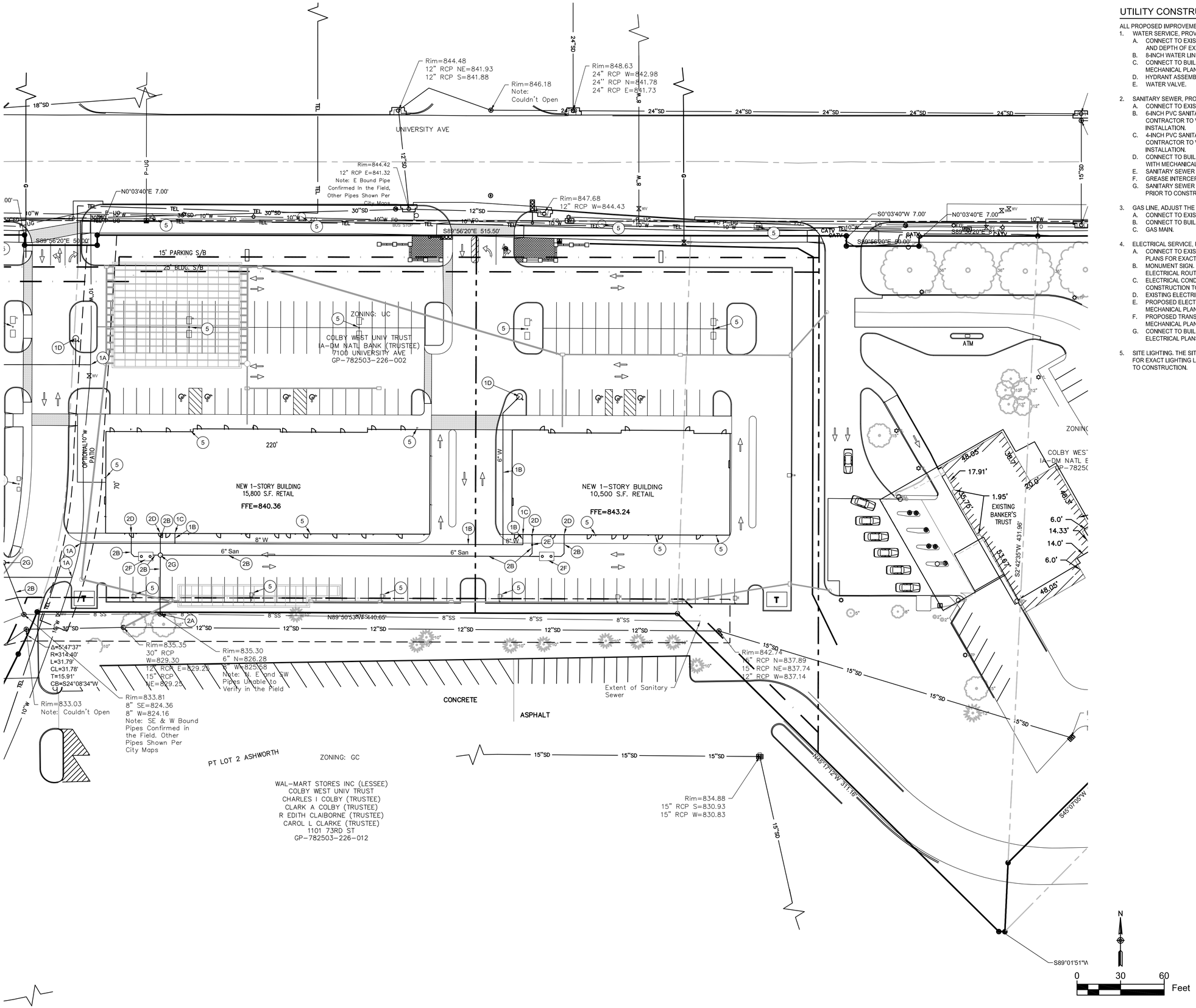

UTILITY CONSTRUCTION NOTES

ALL PROPOSED IMPROVEMENTS SHALL CONFORM TO THE LATEST SUDAS STANDARDS.

1. WATER SERVICE, PROVIDE THE FOLLOWING:
   - A. CONNECT TO EXISTING WATER SERVICE LINE. CONTRACTOR TO FIELD VERIFY THE LOCATION AND DEPTH OF EXISTING SERVICE LINE PRIOR TO CONSTRUCTION.
   - B. 8-INCH WATER LINE AT 5.5' MINIMUM DEPTH.
   - C. CONNECT TO BUILDING WATER SERVICE LINE. CONTRACTOR TO COORDINATE WITH MECHANICAL PLANS.
   - D. HYDRANT ASSEMBLY.
   - E. WATER VALVE.

2. SANITARY SEWER, PROVIDE THE FOLLOWING:
   - A. CONNECT TO EXISTING SANITARY SEWER.
   - B. 6-INCH PVC SANITARY SEWER SERVICE LINE TO BE INSTALLED AT A MINIMUM 2% SLOPE. CONTRACTOR TO VERIFY CONNECTION ELEVATION AND SERVICE LINE SLOPE PRIOR TO INSTALLATION.
   - C. 4-INCH PVC SANITARY SEWER SERVICE LINE TO BE INSTALLED AT A MINIMUM 2% SLOPE. CONTRACTOR TO VERIFY CONNECTION ELEVATION AND SERVICE LINE SLOPE PRIOR TO INSTALLATION.
   - D. CONNECT TO BUILDING SANITARY SEWER SERVICE LINE. CONTRACTOR TO COORDINATE WITH MECHANICAL PLANS.
   - E. SANITARY SEWER CLEANOUT WITH CONCRETE COLLAR.
   - F. GREASE INTERCEPTOR. SEE MECHANICAL PLANS FOR MORE INFORMATION.
   - G. SANITARY SEWER MANHOLE. CONTRACTOR TO VERIFY EXACT SIZE, LOCATION AND INVERTS PRIOR TO CONSTRUCTION.

3. GAS LINE. ADJUST THE FOLLOWING:
   - A. CONNECT TO EXISTING GAS MAIN.
   - B. CONNECT TO BUILDING GAS SERVICE SYSTEM. SEE MECHANICAL PLANS FOR CONTINUATION.
   - C. GAS MAIN.

4. ELECTRICAL SERVICE, PROVIDE THE FOLLOWING:
   - A. CONNECT TO EXISTING ELECTRICAL SERVICE LINE. SEE MECHANICAL AND ELECTRICAL PLANS FOR EXACT ROUTING AND MORE DETAILED INFORMATION.
   - B. MONUMENT SIGN. SEE ARCHITECTURAL AND ELECTRICAL FOR EXACT LOCATION AND ELECTRICAL ROUTING PRIOR TO CONSTRUCTION.
   - C. ELECTRICAL CONDUIT ROUTING. SEE MECHANICAL AND ELECTRICAL PLANS PRIOR TO CONSTRUCTION TO VERIFY EXACT ROUTING AND MORE DETAILED INFORMATION.
   - D. EXISTING ELECTRICAL LINE.
   - E. PROPOSED ELECTRICAL LINE. VERIFY EXACT SIZE AND ROUTING WITH ELECTRICAL AND MECHANICAL PLANS PRIOR TO CONSTRUCTION.
   - F. PROPOSED TRANSFORMER. VERIFY EXACT SIZE AND LAYOUT WITH ELECTRICAL AND MECHANICAL PLAN PRIOR TO CONSTRUCTION.
   - G. CONNECT TO BUILDING ELECTRICAL LINE. VERIFY SIZE AND ROUTING WITH MECHANICAL AND ELECTRICAL PLANS PRIOR TO CONSTRUCTION.

5. SITE LIGHTING. THE SITE LIGHTING SHOWN IS FOR DESIGN LAYOUT ONLY. SEE SITE LIGHTING PLAN FOR EXACT LIGHTING LAYOUT AND ROUTING OF ELECTRICAL LINES AND SPECIFICATIONS PRIOR TO CONSTRUCTION.

RAKER RHODES
Civil
Des Moines, Iowa | Iowa City, Iowa www.rakerrhodes.com

This drawing has been prepared by the Engineer under the Engineer's direct supervision. This drawing is provided as an instrument of service by the Designer / Engineer and is intended for use on this project only. Any reproduction, use, or disclosure of information contained herein without the prior written consent of the Engineer is strictly prohibited. © Copyright 2014 by Raker Rhodes Civil.

Charles I and Ruth Colby
National Development Trust
MidTown Center
Windsor Heights, IA

No.	Description	Date
1	Revised as per City Comments	02/17/2015
2	Revised as per City Comments	07/27/2015
3	Revised as per City Comments	08/13/2015

Date
02/17/2015

Job No. RRC14006
Proj. Mgr. SCM

Sheet Title
Site Utility Plan

Sheet No.
C2.2

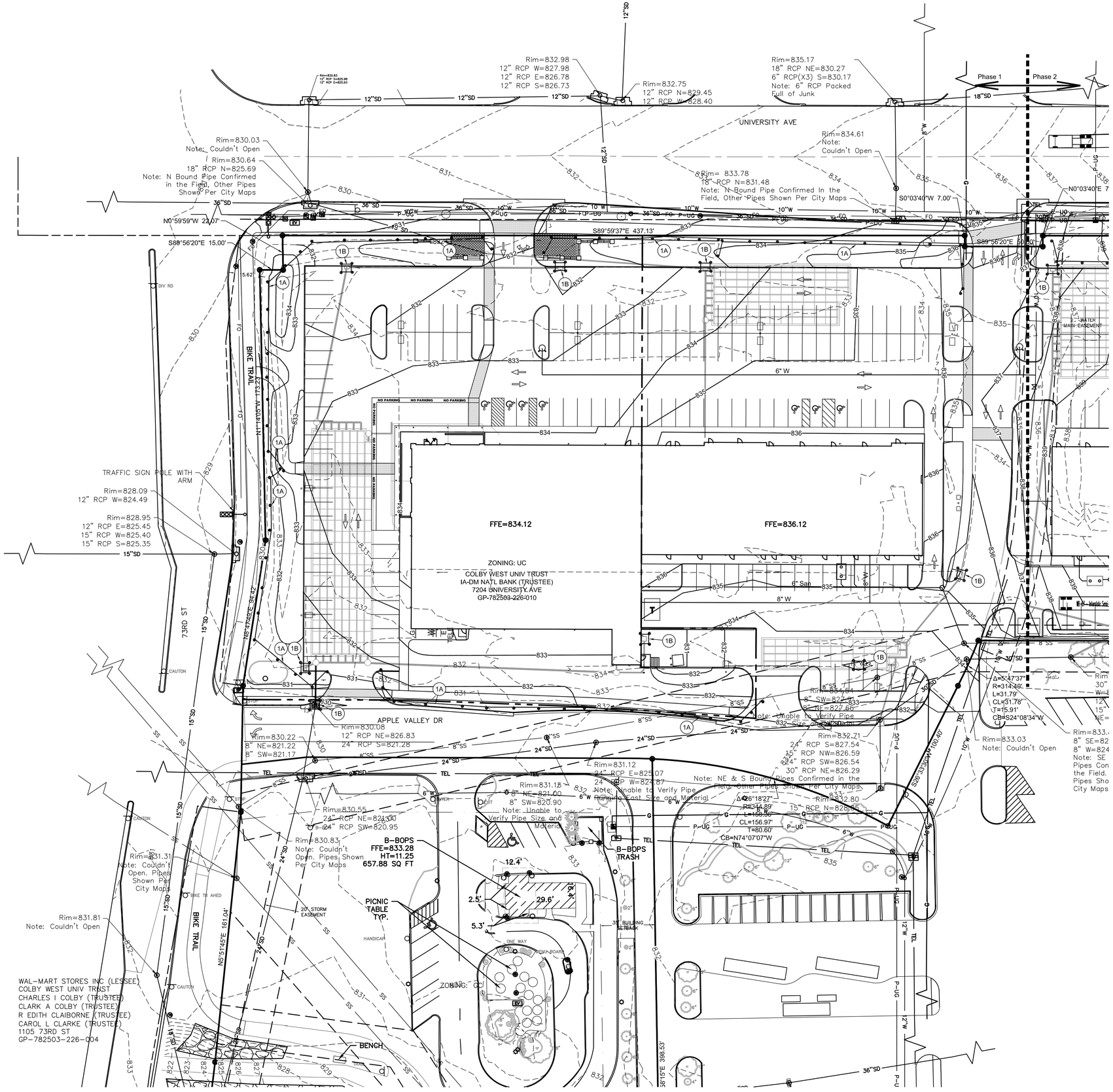

GRADING PLAN NOTES

1. EROSION CONTROL, PROVIDE THE FOLLOWING:
   A. SILT FENCE.
   B. INLET PROTECTION.
2. PROVIDE PRIVATE STORM SEWER AS SHOWN.
3. SEED ALL AREAS DISTURBED BY CONSTRUCTION.
4. ALL CONTOURS AND SPOTS SHOWN ARE TO TOP OF SLAB OR FINISHED GRADE, UNLESS OTHERWISE NOTED DIFFERENTLY.
5. PLACE ALL FILL ACCORDING TO THE MOISTURE AND DENSITY REQUIREMENTS NOTED IN THE SOILS REPORT FOR THE PROJECT.

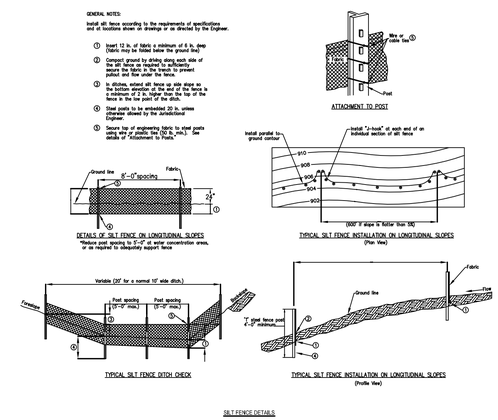

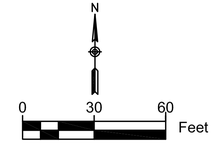

RAKER RHODES Civil
Des Moines, Iowa | Iowa City, Iowa
www.rakerrhodes.com

This drawing has been prepared by the Engineer under the Engineer's direct supervision. This drawing is provided as an instrument of service to the Designer / Engineer and is intended for use on this project only. Any reproduction, use, or distribution of information contained herein without the prior written consent of the Engineer is strictly prohibited. © Copyright 2014 by Raker Rhodes Civil.

Charles I and Ruth Colby National Development Trust MidTown Center

Windsor Heights, IA

No.	Description	Date
1	Revised as per City Comments	02/17/2015
2	Revised as per City Comments	07/27/2015
3	Revised as per City Comments	08/13/2015

Date 02/17/2015

Job No. RRC14006 | Proj. Mgr. SCM

Sheet Title
Site Grading and Erosion Control Plan

Sheet No.
C3.1

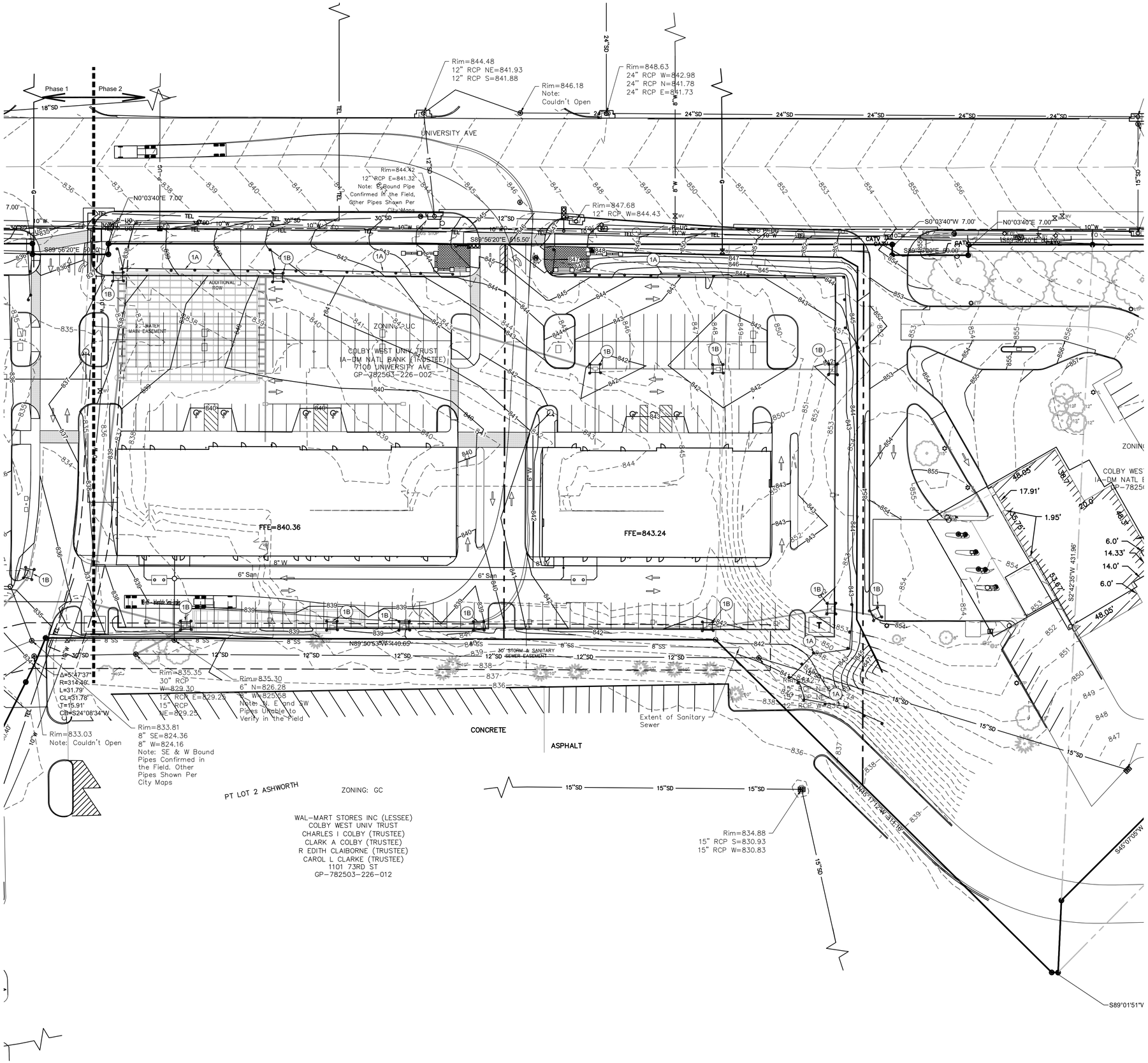

GRADING PLAN NOTES

1. EROSION CONTROL, PROVIDE THE FOLLOWING:
   A. SILT FENCE.
   B. INLET PROTECTION.
2. PROVIDE PRIVATE STORM SEWER AS SHOWN.
3. SEED ALL AREAS DISTURBED BY CONSTRUCTION.
4. ALL CONTOURS AND SPOTS SHOWN ARE TO TOP OF SLAB OR FINISHED GRADE, UNLESS OTHERWISE NOTED DIFFERENTLY.
5. PLACE ALL FILL ACCORDING TO THE MOISTURE AND DENSITY REQUIREMENTS NOTED IN THE SOILS REPORT FOR THE PROJECT.

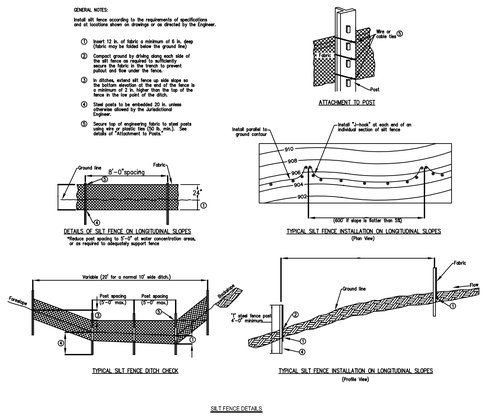

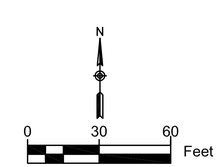

RAKER RHODES Civil
Des Moines, Iowa | Iowa City, Iowa
www.rakerrhodes.com

This drawing has been prepared by the Engineer under the Engineer's direct supervision. This drawing is provided as an instrument of service to the Designer / Engineer and is intended for use on this project only. Any reproduction, use, or distribution of information contained herein without the prior written consent of the Engineer is strictly prohibited. © Copyright 2014 by Raker Rhodes Civil.

Charles I and Ruth Colby National Development Trust MidTown Center

Windsor Heights, IA

No.	Description	Date
1	Revised as per City Comments	02/17/2015
2	Revised as per City Comments	07/27/2015
3	Revised as per City Comments	08/13/2015

Date
02/17/2015

Job No. RRC14006
Proj. Mgr. SCM

Sheet Title
Site Grading and Erosion Control Plan

Sheet No.
C3.2

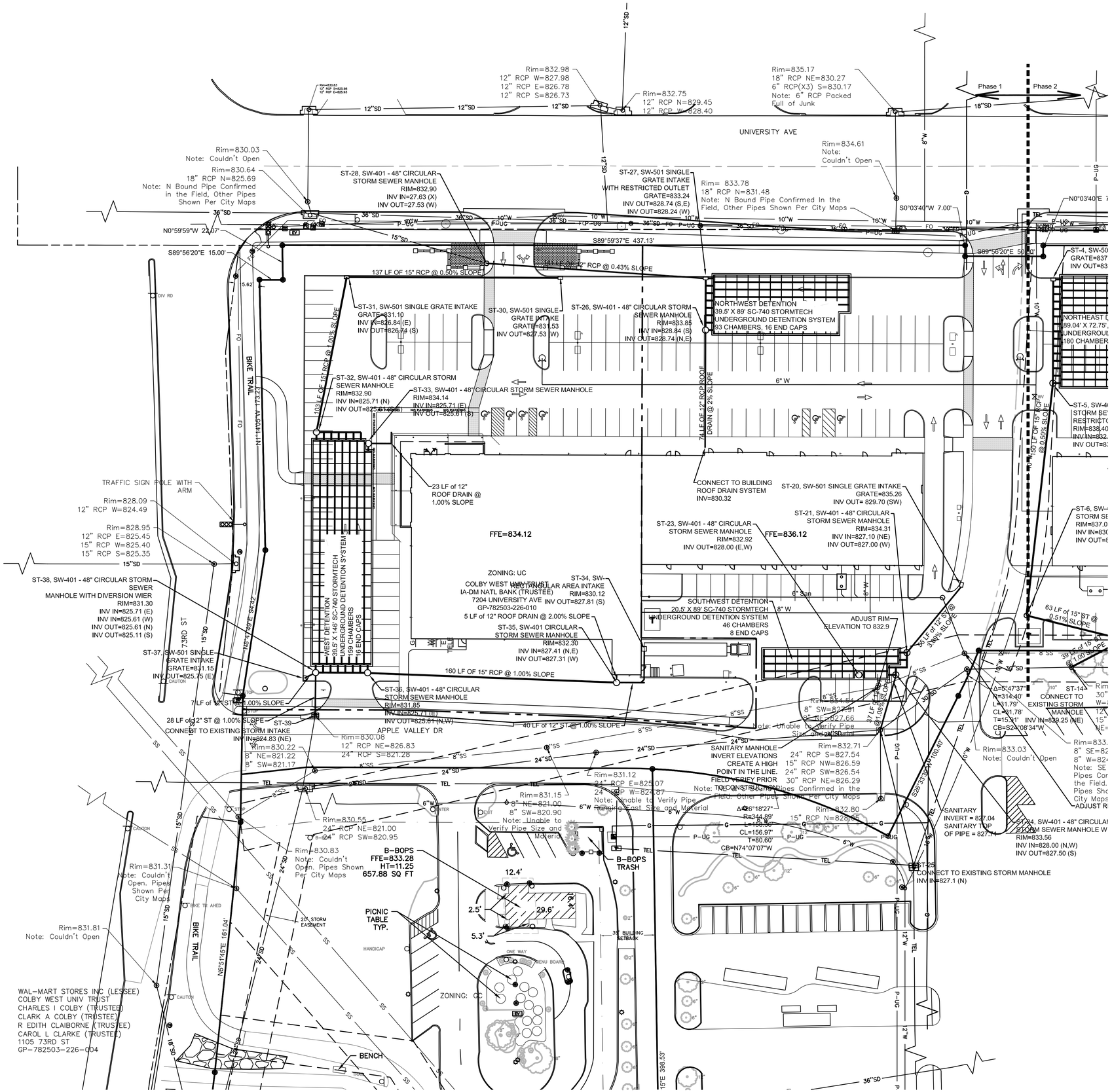

RAKER RHODES
Civil
Des Moines, Iowa | Iowa City, Iowa
www.rakerrhodes.com

This drawing has been prepared by the Engineer under the Engineer's direct supervision. This drawing is provided as an instrument of service by the Designer / Engineer and is intended for use on this project only. Any reproduction, use, or distribution of information contained herein without the prior written consent of the Engineer is strictly prohibited. (C) Copyright 2014 by Raker Rhodes Civil.

Charles I and Ruth Colby National Development Trust MidTown Center

Windsor Heights, IA

No.	Description	Date
1	Revised as per City Comments	02/17/2015
2	Revised as per City Comments	07/27/2015
3	Revised as per City Comments	08/13/2015

Date
02/17/2015

Job No. RRC14006
Proj. Mgr. SCM

Sheet Title
Site Storm Sewer Plan

Sheet No.
C3.3

N

0 30 60 Feet

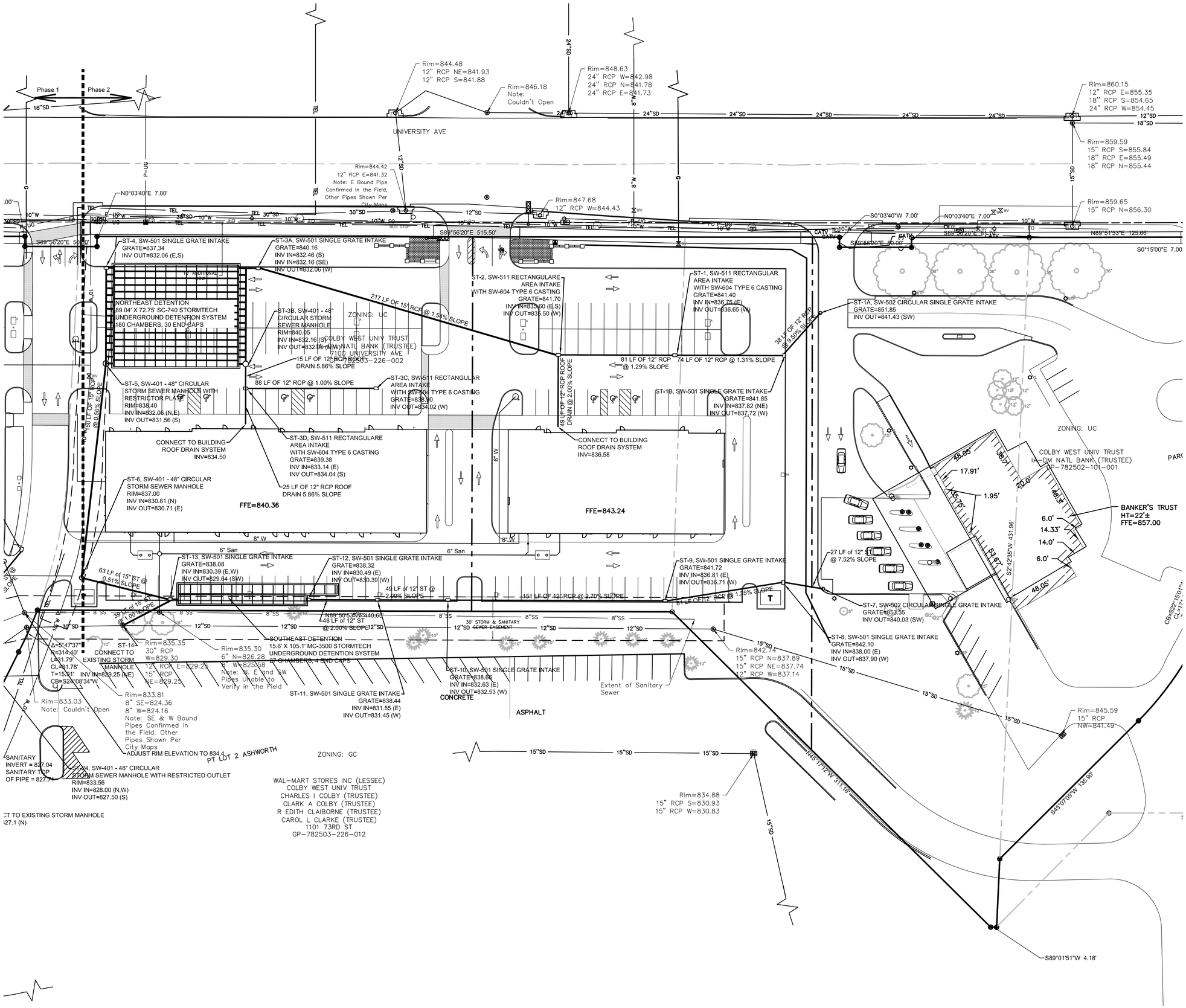

RAKER RHODES
Civil
Des Moines, Iowa | Iowa City, Iowa www.rakerrhodes.com

This drawing has been prepared by the Engineer under the Engineer's direct supervision. This drawing is provided as an instrument of service to the Designer / Engineer and is intended for use on this project only. Any reproduction, use, or distribution of information contained herein without the prior written consent of the Engineer is strictly prohibited. © Copyright 2014 by Raker Rhodes Civil.

Charles I and Ruth Colby National Development Trust MidTown Center

Windsor Heights, IA

No.	Description	Date
1	Revised as per City Comments	02/17/2015
2	Revised as per City Comments	07/27/2015
3	Revised as per City Comments	08/13/2015

Date
02/17/2015

Job No. RRC14006
Proj. Mgr. SCM

Sheet Title
Site Storm Sewer Plan

Sheet No.
C3.4

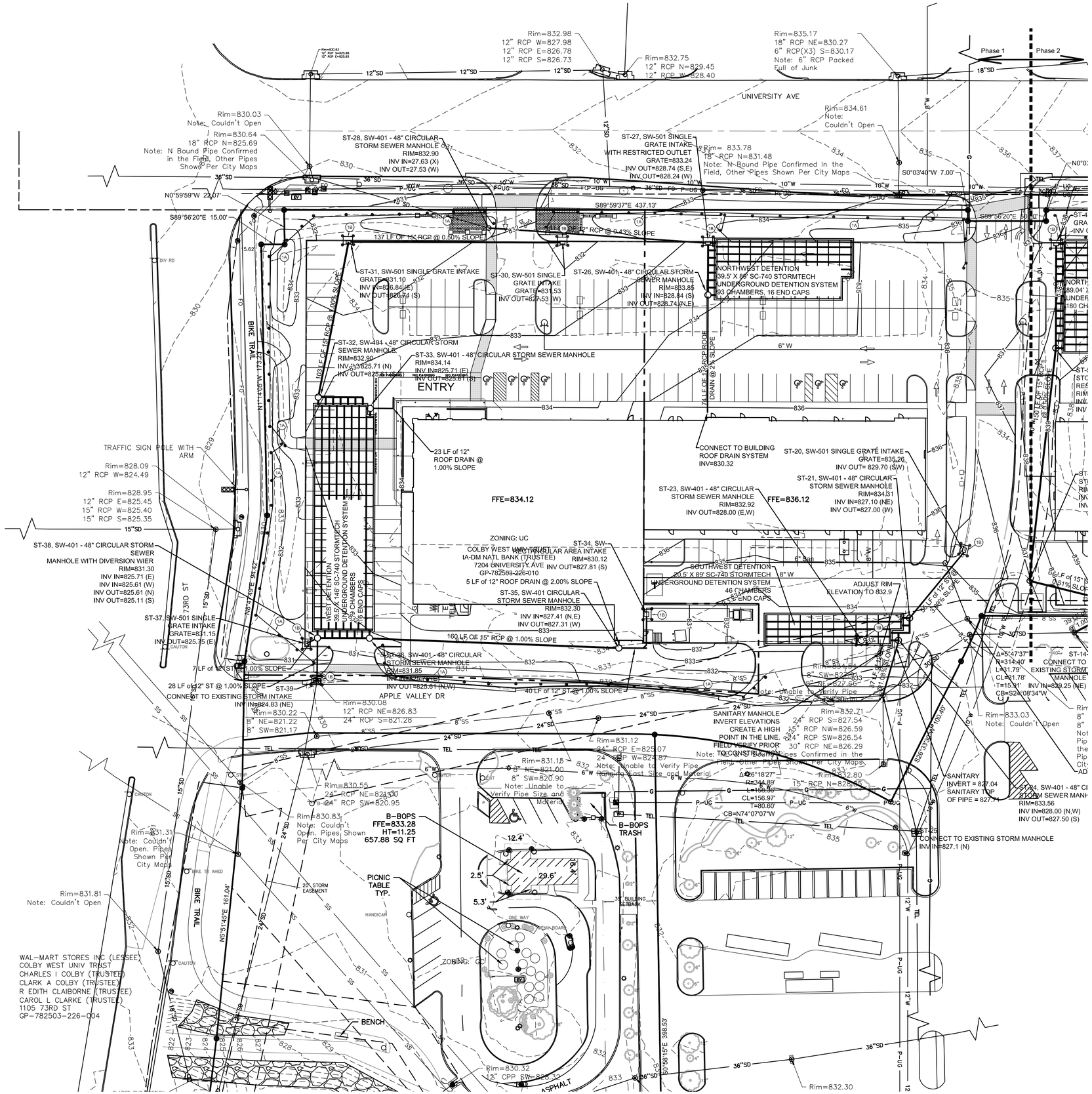

N

0 30 60 Feet

RAKER RHODES Civil
Des Moines, Iowa | Iowa City, Iowa www.rakerrhodes.com

This drawing has been prepared by the Engineer under the Engineer's direct supervision. This drawing is provided as an instrument of service to the Designer / Engineer and is intended for use on this project only. Any reproduction, use, or distribution of information contained herein without the prior written consent of the Engineer is strictly prohibited. © Copyright 2014 by Raker Rhodes Civil.

Charles I and Ruth Colby
National Development Trust
MidTown Center
Windsor Heights, IA

No.	Description	Date
1	Revised as per City Comments	02/17/2015
2	Revised as per City Comments	07/27/2015
3	Revised as per City Comments	08/13/2015

Date
02/17/2015

Job No. RRC14006
Proj. Mgr. SCM

Sheet Title
Site Storm Water Facilities Management Plan

Sheet No.
C3.5

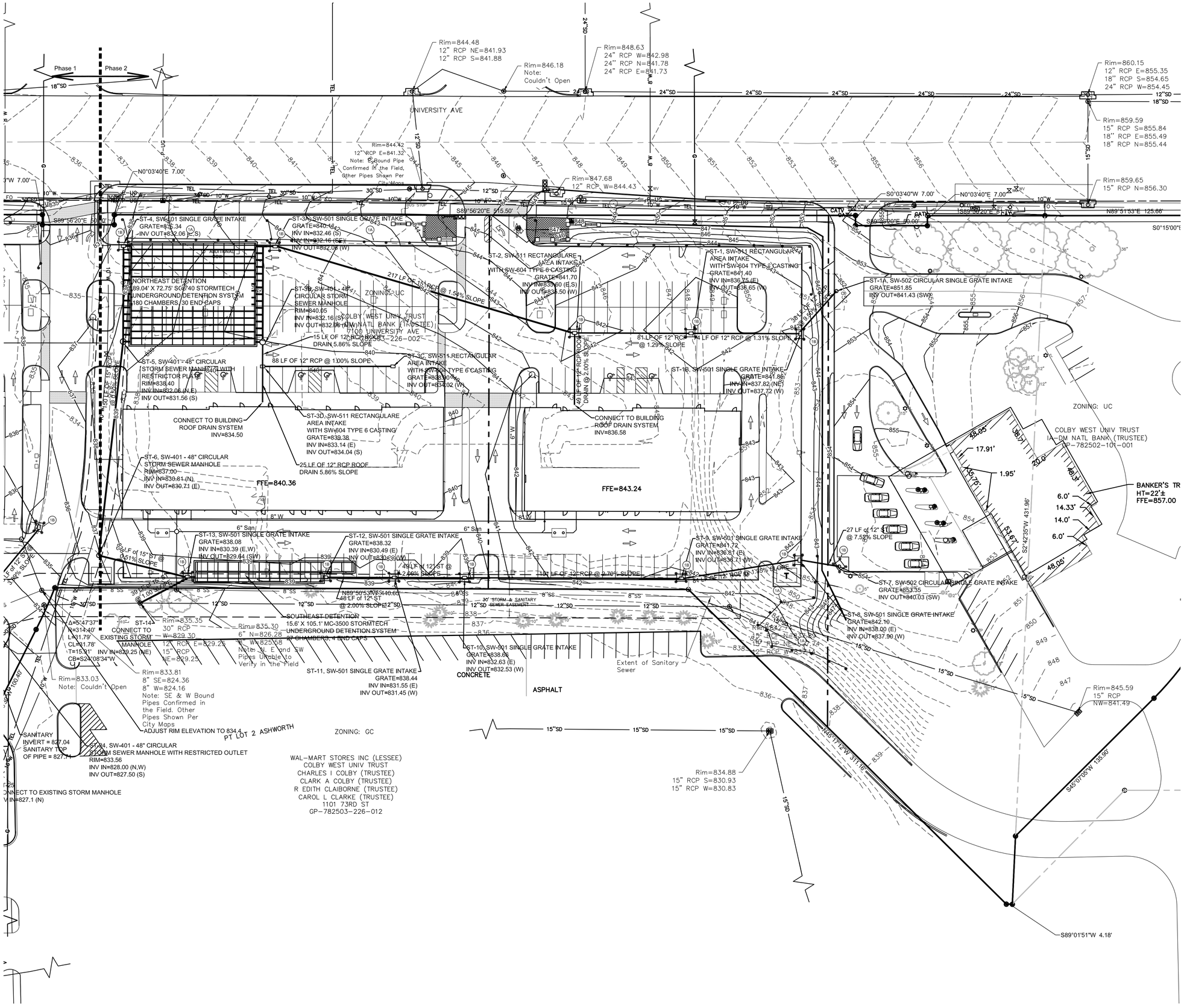

RAKER RHODES
Civil
Des Moines, Iowa | Iowa City, Iowa www.rakerrhodes.com

This drawing has been prepared by the Engineer under the Engineer's direct supervision. This drawing is provided as an instrument of service to the Designer / Engineer and is intended for use on this project only. Any reproduction, use, or distribution without the consent of the Engineer is strictly prohibited. © Copyright 2014 by Raker Rhodes Civil.

Charles I and Ruth Colby National Development Trust MidTown Center

Windsor Heights, IA

No.	Description	Date
1	Revised as per City Comments	02/17/2015
2	Revised as per City Comments	07/27/2015
3	Revised as per City Comments	08/13/2015

Date
02/17/2015

Job No. RRC14006
Proj. Mgr. SCM

Sheet Title
Site Storm Water Facilities Management Plan

Sheet No.
C3.6

① For additional configurations, maintain a minimum of 12 inches of concrete between vertical edges of pipe openings.

② 12 inch minimum riser height above all pipe openings.

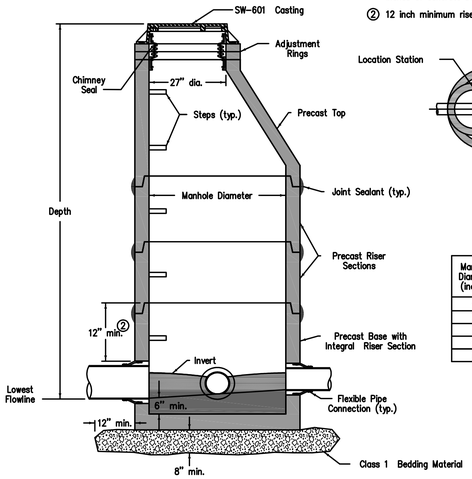

TYPICAL SECTION

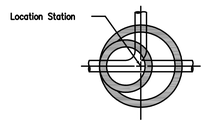

PLAN

Manhole Diameter (inches)	Maximum Pipe Diameter (inches) for 2 Pipes ①	
	At 180° Separation	At 90° Separation
48	24	18
60	36	24
72	42	30
84	48	36
96	60	42

SW-301
CIRCULAR SANITARY SEWER MANHOLE

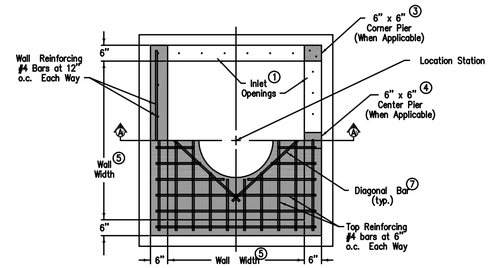

PLAN

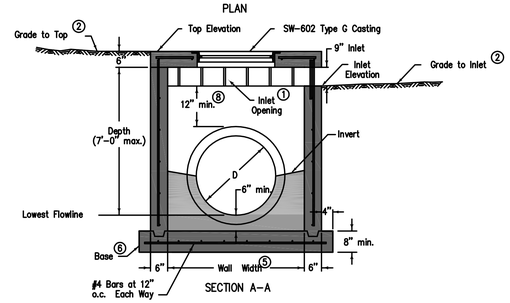

SECTION A-A

① Structure may be built with openings on any or all sides. Provide openings and orientation as specified in the contract documents.

Adjacent walls may have different widths based upon pipe configuration, but structure must be rectangular.

② Construct inlet openings with 15-inch #4 epoxy-coated bars at 8 inches on center. Embed bars a minimum of 3 inches into walls and top at all openings.

③ Grade to inlet elevation on open sides. Grade to top elevation on closed sides.

④ Corner pier required between openings of two adjacent walls. Extend wall reinforcing vertically through pier. Install one additional 15-inch #4 bar in pier.

Center pier required at center of any inlet opening with length of 5 feet or greater. Extend wall reinforcing vertically through pier. Install one additional 15-inch #4 bar in pier.

⑤ Wall widths vary with pipe diameter. Provide 6 inches of wall width (minimum) each side of pipe opening. Minimum wall width is 36 inches. Maximum wall width is 72 inches.

⑥ Cast-in-place base shown. If base is precast integral with walls, the footprint of base is not required to extend beyond the outer edge of the walls.

⑦ Install four #4 diagonal bars at all pipe openings.

⑧ 12" minimum wall height above all pipes.

SW-513
OPEN-SIDED AREA INTAKE

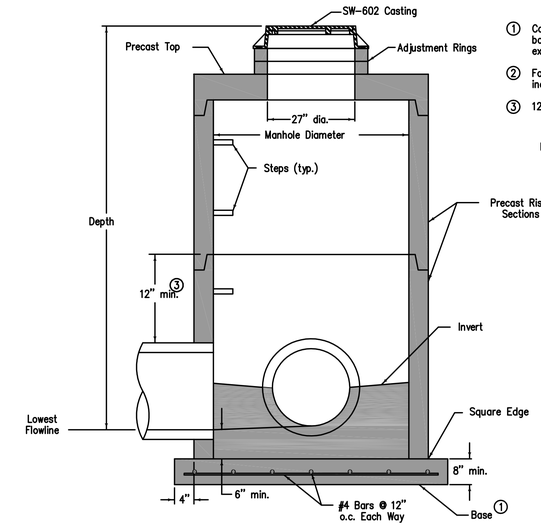

TYPICAL SECTION

① Cast-in-place base shown. If base is precast integral with bottom riser, the footprint of the base is not required to extend beyond the outer edge of the riser.

② For additional configurations, maintain a minimum of 12 inches of concrete between vertical edges of pipe openings.

③ 12 inch minimum riser height above all pipe openings.

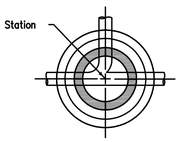

PLAN

Manhole Diameter (inches)	Maximum Pipe Diameter (inches) for 2 Pipes ②	
	At 180° Separation	At 90° Separation
48	24	18
60	36	24
72	42	30
84	48	36
96	60	42

SW-401
CIRCULAR STORM SEWER MANHOLE

① Install four #4 diagonal bars at all pipe openings.

② Cast-in-place base shown. If base is precast integral with walls, the footprint of the base is not required to extend beyond the outer edge of the walls.

③ 12 inch minimum wall height above all pipes.

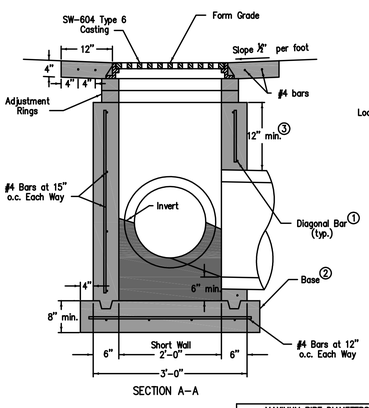

SECTION A-A

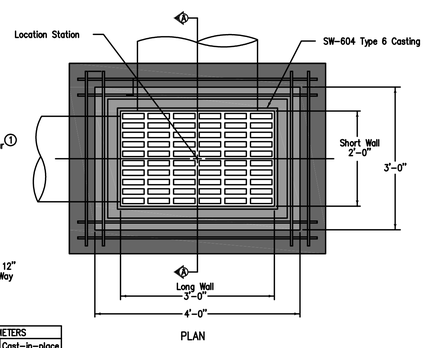

PLAN

MAXIMUM PIPE DIAMETERS		
Pipe Location	Precast Structure	Cast-in-place Structure
Short Wall	15"	18"
Long Wall	24"	30"

SW-511
RECTANGULAR AREA INTAKE

Refer to SW-514 for boxout details.

① SW-603 Type R unless Type Q is specified in the contract documents.

② Cast-in-place base shown. Base may be square. If base is precast integral with walls, the footprint of the base is not required to extend beyond the outer edge of the walls.

③ For additional configurations, maintain a minimum of 12 inches of concrete between vertical edges of pipe openings.

④ 12 inch minimum riser height above all pipes.

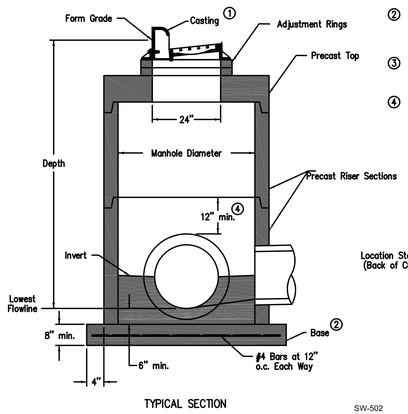

TYPICAL SECTION

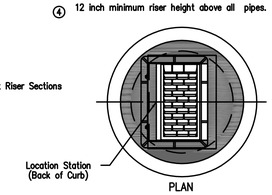

PLAN

Manhole Diameter (inches)	Maximum Pipe Diameter (inches) for 2 Pipes ③	
	at 180° Separation	at 90° Separation
48	24	18
60	36	24
72	42	30
84	48	36
96	60	42

SW-502
CIRCULAR SINGLE GRATE INTAKE

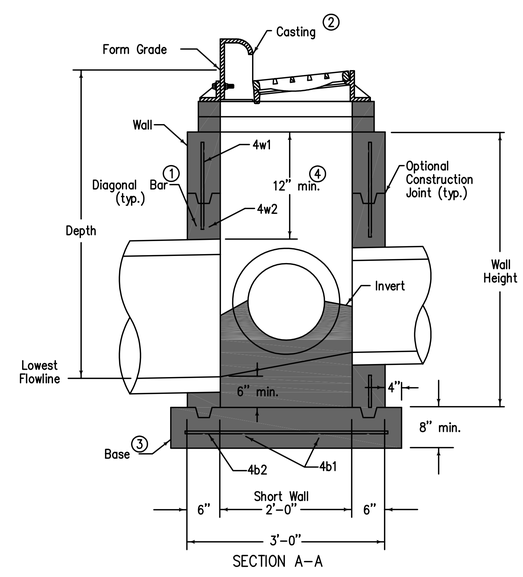

SECTION A-A

Refer to SW-514 for boxout details.

① Install four #4 diagonal bars at all pipe openings.

② SW-603 Type R unless Type Q is specified in the contract documents.

③ Cast-in-place base shown. If base is precast integral with walls, the footprint of the base is not required to extend beyond the outer edge of the walls.

④ 12 inch minimum wall height above all pipes.

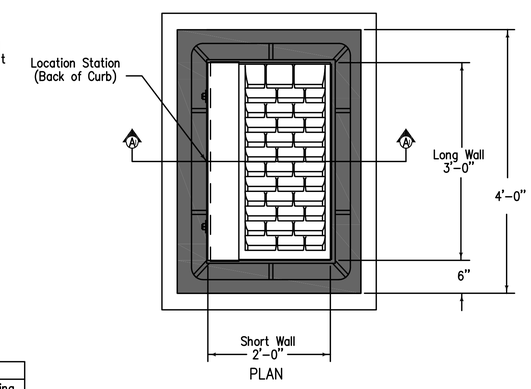

PLAN

REINFORCING BAR LIST						
Mark	Size	Location	Shape	Length	Count	Spacing
4w1	4	Walls	———	Wall Height minus 4"	14	12"
4w2	4	Long Walls	———	3'-8"	Varies	12"
4w3	4	Short Walls	———	2'-8"	Varies	12"
4b1	4	Base	———	4'-2"	4	10"
4b2	4	Base	———	3'-2"	5	10"

MAXIMUM PIPE DIAMETERS		
Pipe Location	Precast Structure	Cast-in-place Structure
Short Wall	15"	18"
Long Wall	24"	30"

SW-501
SINGLE GRATE INTAKE

RAKER RHODES Civil
Des Moines, Iowa | Iowa City, Iowa
www.rakerrhodes.com

This drawing has been prepared by the Engineer or under the Engineer's direct supervision. This drawing is provided as an instrument of service. The Designer / Engineer and is intended for use on this project only. Any reproduction, use, or distribution of information contained herein without the prior written consent of the Engineer is strictly prohibited. (C) Copyright 2014 by Raker Rhodes Civil.

Charles I and Ruth Colby
National Development Trust
MidTown Center
Windsor Heights, IA

No.	Description	Date
1	Revised as per City Comments	02/17/2015
2	Revised as per City Comments	07/27/2015
3	Revised as per City Comments	08/13/2015

Date
02/17/2015

Job No. RRC14006
Proj. Mgr. SCM

Sheet Title
Site Details

Sheet No.
C5.1

ACCEPTABLE FILL MATERIALS: STORMTECH SC-740 CHAMBER SYSTEMS

	MATERIAL LOCATION	DESCRIPTION	AASHTO MATERIAL CLASSIFICATIONS	COMPACTION / DENSITY REQUIREMENT
D	**FINAL FILL:** FILL MATERIAL FOR LAYER 'D' STARTS FROM THE TOP OF THE 'C' LAYER TO THE BOTTOM OF FLEXIBLE PAVEMENT OR UNPAVED FINISHED GRADE ABOVE. NOTE THAT PAVEMENT SUBBASE MAY BE PART OF THE 'D' LAYER	ANY SOIL/ROCK MATERIALS, NATIVE SOILS, OR PER ENGINEER'S PLANS. CHECK PLANS FOR PAVEMENT SUBGRADE REQUIREMENTS.	N/A	PREPARE PER SITE DESIGN ENGINEER'S PLANS. PAVED INSTALLATIONS MAY HAVE STRINGENT MATERIAL AND PREPARATION REQUIREMENTS.
C	**INITIAL FILL:** FILL MATERIAL FOR LAYER 'C' STARTS FROM THE TOP OF THE EMBEDMENT STONE ('B' LAYER) TO 18" (450 mm) ABOVE THE TOP OF THE CHAMBER. NOTE THAT PAVEMENT SUBBASE MAY BE A PART OF THE 'C' LAYER.	GRANULAR WELL-GRADED SOIL/AGGREGATE MIXTURES, <35% FINES OR PROCESSED AGGREGATE. MOST PAVEMENT SUBBASE MATERIALS CAN BE USED IN LIEU OF THIS LAYER.	AASHTO M145[1] A-1, A-2-4, A-3 OR AASHTO M43[1] 3, 357, 4, 467, 5, 56, 57, 6, 67, 68, 7, 78, 8, 89, 9, 10	BEGIN COMPACTIONS AFTER 12" (300 mm) OF MATERIAL OVER THE CHAMBERS IS REACHED. COMPACT ADDITIONAL LAYERS IN 6" (150 mm) MAX LIFTS TO A MIN. 95% PROCTOR DENSITY FOR WELL GRADED MATERIAL AND 95% RELATIVE DENSITY FOR PROCESSED AGGREGATE MATERIALS. ROLLER GROSS VEHICLE WEIGHT NOT TO EXCEED 12,000 lbs (53 kN). DYNAMIC FORCE NOT TO EXCEED 20,000 lbs (89 kN).
B	**EMBEDMENT STONE:** FILL SURROUNDING THE CHAMBERS FROM THE FOUNDATION STONE ('A' LAYER) TO THE 'C' LAYER ABOVE.	CLEAN, CRUSHED, ANGULAR STONE, NOMINAL SIZE DISTRIBUTION BETWEEN 3/4-2 INCH (20-50 mm)	AASHTO M43[1] 3, 357, 4, 467, 5, 56, 57	NO COMPACTION REQUIRED.
A	**FOUNDATION STONE:** FILL BELOW CHAMBERS FROM THE SUBGRADE UP TO THE FOOT (BOTTOM) OF THE CHAMBER.	CLEAN, CRUSHED, ANGULAR STONE, NOMINAL SIZE DISTRIBUTION BETWEEN 3/4-2 INCH (20-50 mm)	AASHTO M43[1] 3, 357, 4, 467, 5, 56, 57	PLATE COMPACT OR ROLL TO ACHIEVE A FLAT SURFACE. [2,3]

PLEASE NOTE:
1. THE LISTED AASHTO DESIGNATIONS ARE FOR GRADATIONS ONLY. THE STONE MUST ALSO BE CLEAN, CRUSHED, ANGULAR. FOR EXAMPLE, A SPECIFICATION FOR #4 STONE WOULD STATE: "CLEAN, CRUSHED, ANGULAR NO. 4 (AASHTO M43) STONE".
2. STORMTECH COMPACTION REQUIREMENTS ARE MET FOR 'A' LOCATION MATERIALS WHEN PLACED AND COMPACTED IN 6" (150 mm) (MAX) LIFTS USING TWO FULL COVERAGES WITH A VIBRATORY COMPACTOR.
3. WHERE INFILTRATION SURFACES MAY BE COMPROMISED BY COMPACTION, FOR STANDARD DESIGN LOAD CONDITIONS, A FLAT SURFACE MAY BE ACHIEVED BY RAKING OR DRAGGING WITHOUT COMPACTION EQUIPMENT. FOR SPECIAL LOAD DESIGNS, CONTACT STORMTECH FOR COMPACTION REQUIREMENTS.

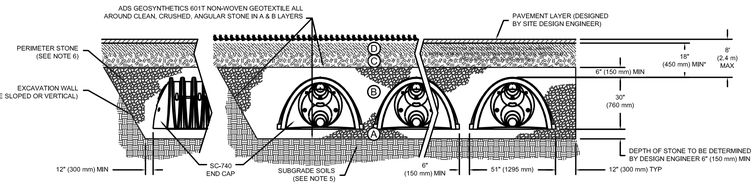

NOTES:

1. SC-740 CHAMBERS SHALL CONFORM TO THE REQUIREMENTS OF ASTM F2418 "STANDARD SPECIFICATION FOR POLYPROPYLENE (PP) CORRUGATED WALL STORMWATER COLLECTION CHAMBERS", OR ASTM F2922 "STANDARD SPECIFICATION FOR POLYETHYLENE (PE) CORRUGATED WALL STORMWATER COLLECTION CHAMBERS".
2. SC-740 CHAMBERS SHALL BE DESIGNED IN ACCORDANCE WITH ASTM F2787 "STANDARD PRACTICE FOR STRUCTURAL DESIGN OF THERMOPLASTIC CORRUGATED WALL STORMWATER COLLECTION CHAMBERS".
3. "ACCEPTABLE FILL MATERIALS" TABLE ABOVE PROVIDES MATERIAL LOCATIONS, DESCRIPTIONS, GRADATIONS, AND COMPACTION REQUIREMENTS FOR FOUNDATION, EMBEDMENT, AND FILL MATERIALS.
4. THE "SITE DESIGN ENGINEER" REFERS TO THE ENGINEER RESPONSIBLE FOR THE DESIGN AND LAYOUT OF THE STORMTECH CHAMBERS FOR THIS PROJECT.
5. THE SITE DESIGN ENGINEER IS RESPONSIBLE FOR ASSESSING THE BEARING RESISTANCE (ALLOWABLE BEARING CAPACITY) OF THE SUBGRADE SOILS AND THE DEPTH OF FOUNDATION STONE WITH CONSIDERATION FOR THE RANGE OF EXPECTED SOIL MOISTURE CONDITIONS.
6. PERIMETER STONE MUST BE EXTENDED HORIZONTALLY TO THE EXCAVATION WALL FOR BOTH VERTICAL AND SLOPED EXCAVATION WALLS.
7. ONCE LAYER 'C' IS PLACED, ANY SOIL/MATERIAL CAN BE PLACED IN LAYER 'D' UP TO THE FINISHED GRADE. MOST PAVEMENT SUBBASE SOILS CAN BE USED TO REPLACE THE MATERIAL REQUIREMENTS OF LAYER 'C' OR 'D' AT THE SITE DESIGN ENGINEER'S DISCRETION.

SC-740 STANDARD CROSS SECTION

REV	DRW	CHK	DESCRIPTION

DATE: 11/19/14 DRAWN: AJM
PROJECT #: CHECKED: AJM

ADS
4640 TRUEMAN BLVD
HILLIARD, OH 43026
1-800-733-7473

SHEET 1 OF 1

THIS DRAWING HAS BEEN PREPARED BASED ON INFORMATION PROVIDED TO US UNDER THE DIRECTION OF THE SITE DESIGN ENGINEER OR OTHER PROJECT REPRESENTATIVES. THE SITE DESIGN ENGINEER IS RESPONSIBLE FOR THE ACCURACY AND ADEQUACY OF THE SITE DESIGN, INCLUDING BUT NOT LIMITED TO SITE LAYOUT, GRADES, BEARING CAPACITY, FOUNDATION STONE, BACKFILL MATERIALS, AND COMPACTION REQUIREMENTS. ADS DOES NOT ASSUME ANY RESPONSIBILITY FOR THE ACCURACY OR ADEQUACY OF THE SITE DESIGN, INCLUDING BUT NOT LIMITED TO THE SITE LAYOUT, GRADES, BEARING CAPACITY, FOUNDATION STONE, BACKFILL MATERIALS, AND COMPACTION REQUIREMENTS, EVEN IF THIS DRAWING HAS BEEN PROVIDED TO THE OWNER OR PROJECT REPRESENTATIVE OF OWNER.

ACCEPTABLE FILL MATERIALS: STORMTECH MC-3500 CHAMBER SYSTEMS

	MATERIAL LOCATION	DESCRIPTION	AASHTO MATERIAL CLASSIFICATIONS	COMPACTION / DENSITY REQUIREMENT
D	**FINAL FILL:** FILL MATERIAL FOR LAYER 'D' STARTS FROM THE TOP OF THE 'C' LAYER TO THE BOTTOM OF FLEXIBLE PAVEMENT OR UNPAVED FINISHED GRADE ABOVE. NOTE THAT PAVEMENT SUBBASE MAY BE PART OF THE 'D' LAYER	ANY SOIL/ROCK MATERIALS, NATIVE SOILS, OR PER ENGINEER'S PLANS. CHECK PLANS FOR PAVEMENT SUBGRADE REQUIREMENTS.	N/A	PREPARE PER SITE DESIGN ENGINEER'S PLANS. PAVED INSTALLATIONS MAY HAVE STRINGENT MATERIAL AND PREPARATION REQUIREMENTS.
C	**INITIAL FILL:** FILL MATERIAL FOR LAYER 'C' STARTS FROM THE TOP OF THE EMBEDMENT STONE ('B' LAYER) TO 24" (600 mm) ABOVE THE TOP OF THE CHAMBER. NOTE THAT PAVEMENT SUBBASE MAY BE A PART OF THE 'C' LAYER.	GRANULAR WELL-GRADED SOIL/AGGREGATE MIXTURES, <35% FINES OR PROCESSED AGGREGATE. MOST PAVEMENT SUBBASE MATERIALS CAN BE USED IN LIEU OF THIS LAYER.	AASHTO M145[1] A-1, A-2-4, A-3 OR AASHTO M43[1] 3, 357, 4, 467, 5, 56, 57, 6, 67, 68, 7, 78, 8, 89, 9, 10	BEGIN COMPACTIONS AFTER 24" (600 mm) OF MATERIAL OVER THE CHAMBERS IS REACHED. COMPACT ADDITIONAL LAYERS IN 12" (300 mm) MAX LIFTS TO A MIN. 95% PROCTOR DENSITY FOR WELL GRADED MATERIAL AND 95% RELATIVE DENSITY FOR PROCESSED AGGREGATE MATERIALS.
B	**EMBEDMENT STONE:** FILL SURROUNDING THE CHAMBERS FROM THE FOUNDATION STONE ('A' LAYER) TO THE 'C' LAYER ABOVE.	CLEAN, CRUSHED, ANGULAR STONE, NOMINAL SIZE DISTRIBUTION BETWEEN 3/4-2 INCH (20-50 mm)	AASHTO M43[1] 3, 4	NO COMPACTION REQUIRED.
A	**FOUNDATION STONE:** FILL BELOW CHAMBERS FROM THE SUBGRADE UP TO THE FOOT (BOTTOM) OF THE CHAMBER.	CLEAN, CRUSHED, ANGULAR STONE, NOMINAL SIZE DISTRIBUTION BETWEEN 3/4-2 INCH (20-50 mm)	AASHTO M43[1] 3, 4	PLATE COMPACT OR ROLL TO ACHIEVE A FLAT SURFACE. [2,3]

PLEASE NOTE:
1. THE LISTED AASHTO DESIGNATIONS ARE FOR GRADATIONS ONLY. THE STONE MUST ALSO BE CLEAN, CRUSHED, ANGULAR. FOR EXAMPLE, A SPECIFICATION FOR #4 STONE WOULD STATE: "CLEAN, CRUSHED, ANGULAR NO. 4 (AASHTO M43) STONE".
2. STORMTECH COMPACTION REQUIREMENTS ARE MET FOR 'A' LOCATION MATERIALS WHEN PLACED AND COMPACTED IN 9" (230 mm) (MAX) LIFTS USING TWO FULL COVERAGES WITH A VIBRATORY COMPACTOR.
3. WHERE INFILTRATION SURFACES MAY BE COMPROMISED BY COMPACTION, FOR STANDARD DESIGN LOAD CONDITIONS, A FLAT SURFACE MAY BE ACHIEVED BY RAKING OR DRAGGING WITHOUT COMPACTION EQUIPMENT. FOR SPECIAL LOAD DESIGNS, CONTACT STORMTECH FOR COMPACTION REQUIREMENTS.

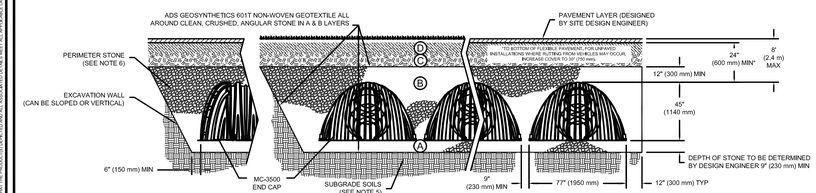

NOTES:

1. MC-3500 CHAMBERS SHALL CONFORM TO THE REQUIREMENTS OF ASTM F2418 "STANDARD SPECIFICATION FOR POLYPROPYLENE (PP) CORRUGATED WALL STORMWATER COLLECTION CHAMBERS".
2. MC-3500 CHAMBERS SHALL BE DESIGNED IN ACCORDANCE WITH ASTM F2787 "STANDARD PRACTICE FOR STRUCTURAL DESIGN OF THERMOPLASTIC CORRUGATED WALL STORMWATER COLLECTION CHAMBERS".
3. "ACCEPTABLE FILL MATERIALS" TABLE ABOVE PROVIDES MATERIAL LOCATIONS, DESCRIPTIONS, GRADATIONS, AND COMPACTION REQUIREMENTS FOR FOUNDATION, EMBEDMENT, AND FILL MATERIALS.
4. THE "SITE DESIGN ENGINEER" REFERS TO THE ENGINEER RESPONSIBLE FOR THE DESIGN AND LAYOUT OF THE STORMTECH CHAMBERS FOR THIS PROJECT.
5. THE SITE DESIGN ENGINEER IS RESPONSIBLE FOR ASSESSING THE BEARING RESISTANCE (ALLOWABLE BEARING CAPACITY) OF THE SUBGRADE SOILS AND THE DEPTH OF FOUNDATION STONE WITH CONSIDERATION FOR THE RANGE OF EXPECTED SOIL MOISTURE CONDITIONS.
6. PERIMETER STONE MUST BE EXTENDED HORIZONTALLY TO THE EXCAVATION WALL FOR BOTH VERTICAL AND SLOPED EXCAVATION WALLS.
7. ONCE LAYER 'C' IS PLACED, ANY SOIL/MATERIAL CAN BE PLACED IN LAYER 'D' UP TO THE FINISHED GRADE. MOST PAVEMENT SUBBASE SOILS CAN BE USED TO REPLACE THE MATERIAL REQUIREMENTS OF LAYER 'C' OR 'D' AT THE SITE DESIGN ENGINEER'S DISCRETION.

MC-3500 STANDARD CROSS SECTION

REV	DRW	CHK	DESCRIPTION

DATE: 11/19/14 DRAWN: AJM
PROJECT #: CHECKED: AJM

ADS
4640 TRUEMAN BLVD
HILLIARD, OH 43026
1-800-733-7473

SHEET 1 OF 1

THIS DRAWING HAS BEEN PREPARED BASED ON INFORMATION PROVIDED TO US UNDER THE DIRECTION OF THE SITE DESIGN ENGINEER OR OTHER PROJECT REPRESENTATIVES. THE SITE DESIGN ENGINEER IS RESPONSIBLE FOR THE ACCURACY AND ADEQUACY OF THE SITE DESIGN, INCLUDING BUT NOT LIMITED TO SITE LAYOUT, GRADES, BEARING CAPACITY, FOUNDATION STONE, BACKFILL MATERIALS, AND COMPACTION REQUIREMENTS. ADS DOES NOT ASSUME ANY RESPONSIBILITY FOR THE ACCURACY OR ADEQUACY OF THE SITE DESIGN, INCLUDING BUT NOT LIMITED TO THE SITE LAYOUT, GRADES, BEARING CAPACITY, FOUNDATION STONE, BACKFILL MATERIALS, AND COMPACTION REQUIREMENTS, EVEN IF THIS DRAWING HAS BEEN PROVIDED TO THE OWNER OR PROJECT REPRESENTATIVE OF OWNER.

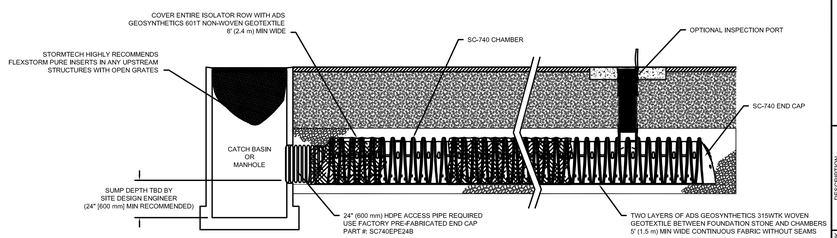

SC-740 ISOLATOR ROW DETAIL
NTS

INSPECTION & MAINTENANCE

STEP 1) INSPECT ISOLATOR ROW FOR SEDIMENT
- A. INSPECTION PORTS (IF PRESENT)
  - A.1. REMOVE/OPEN LID ON NYLOPLAST INLINE DRAIN
  - A.2. REMOVE AND CLEAN FLEXSTORM FILTER IF INSTALLED
  - A.3. USING A FLASHLIGHT AND STADIA ROD, MEASURE DEPTH OF SEDIMENT AND RECORD ON MAINTENANCE LOG
  - A.4. LOWER A CAMERA INTO ISOLATOR ROW FOR VISUAL INSPECTION OF SEDIMENT LEVELS (OPTIONAL)
  - A.5. IF SEDIMENT IS AT, OR ABOVE, 3" (80 mm) PROCEED TO STEP 2. IF NOT, PROCEED TO STEP 3.
- B. ALL ISOLATOR ROWS
  - B.1. REMOVE COVER FROM STRUCTURE AT UPSTREAM END OF ISOLATOR ROW
  - B.2. USING A FLASHLIGHT, INSPECT DOWN THE ISOLATOR ROW THROUGH OUTLET PIPE
    - i) MIRRORS ON POLES OR CAMERAS MAY BE USED TO AVOID A CONFINED SPACE ENTRY
    - ii) FOLLOW OSHA REGULATIONS FOR CONFINED SPACE ENTRY IF ENTERING MANHOLE
  - B.3. IF SEDIMENT IS AT, OR ABOVE, 3" (80 mm) PROCEED TO STEP 2. IF NOT, PROCEED TO STEP 3.

STEP 2) CLEAN OUT ISOLATOR ROW USING THE JETVAC PROCESS
- A. A FIXED CULVERT CLEANING NOZZLE WITH REAR FACING SPREAD OF 45" (1.1 m) OR MORE IS PREFERRED
- B. APPLY MULTIPLE PASSES OF JETVAC UNTIL BACKFLUSH WATER IS CLEAN
- C. VACUUM STRUCTURE SUMP AS REQUIRED

STEP 3) REPLACE ALL COVERS, GRATES, FILTERS, AND LIDS; RECORD OBSERVATIONS AND ACTIONS.

STEP 4) INSPECT AND CLEAN BASINS AND MANHOLES UPSTREAM OF THE STORMTECH SYSTEM.

NOTES

1. INSPECT EVERY 6 MONTHS DURING THE FIRST YEAR OF OPERATION. ADJUST THE INSPECTION INTERVAL BASED ON PREVIOUS OBSERVATIONS OF SEDIMENT ACCUMULATION AND HIGH WATER ELEVATIONS.
2. CONDUCT JETTING AND VACTORING ANNUALLY OR WHEN INSPECTION SHOWS THAT MAINTENANCE IS NECESSARY.

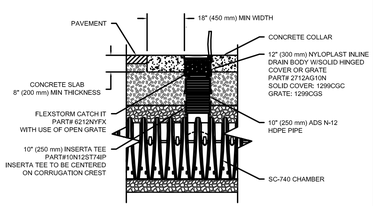

SC-740 INSPECTION PORT DETAIL
NTS

SC-740 ISOLATOR ROW DETAILS

REV	DRW	CHK	DESCRIPTION

DATE: 11/19/14 DRAWN: AJM
PROJECT #: CHECKED: AJM

ADS
4640 TRUEMAN BLVD
HILLIARD, OH 43026
1-800-733-7473

SHEET 1 OF 1

THIS DRAWING HAS BEEN PREPARED BASED ON INFORMATION PROVIDED TO US UNDER THE DIRECTION OF THE SITE DESIGN ENGINEER OR OTHER PROJECT REPRESENTATIVES. THE SITE DESIGN ENGINEER IS RESPONSIBLE FOR THE ACCURACY AND ADEQUACY OF THE SITE DESIGN, INCLUDING BUT NOT LIMITED TO SITE LAYOUT, GRADES, BEARING CAPACITY, FOUNDATION STONE, BACKFILL MATERIALS, AND COMPACTION REQUIREMENTS. ADS DOES NOT ASSUME ANY RESPONSIBILITY FOR THE ACCURACY OR ADEQUACY OF THE SITE DESIGN, INCLUDING BUT NOT LIMITED TO THE SITE LAYOUT, GRADES, BEARING CAPACITY, FOUNDATION STONE, BACKFILL MATERIALS, AND COMPACTION REQUIREMENTS, EVEN IF THIS DRAWING HAS BEEN PROVIDED TO THE OWNER OR PROJECT REPRESENTATIVE OF OWNER.

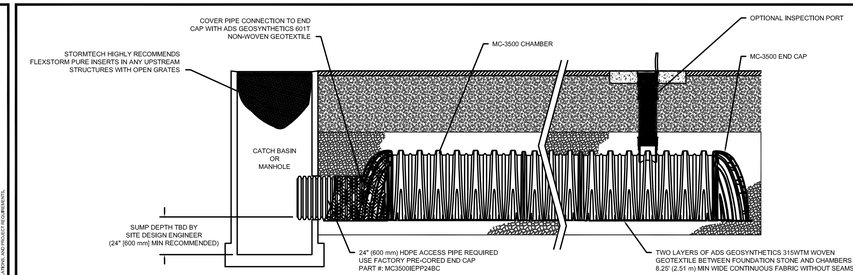

MC-3500 ISOLATOR ROW DETAIL
NTS

INSPECTION & MAINTENANCE

STEP 1) INSPECT ISOLATOR ROW FOR SEDIMENT
- A. INSPECTION PORTS (IF PRESENT)
  - A.1. REMOVE/OPEN LID ON NYLOPLAST INLINE DRAIN
  - A.2. REMOVE AND CLEAN FLEXSTORM FILTER IF INSTALLED
  - A.3. USING A FLASHLIGHT AND STADIA ROD, MEASURE DEPTH OF SEDIMENT AND RECORD ON MAINTENANCE LOG
  - A.4. LOWER A CAMERA INTO ISOLATOR ROW FOR VISUAL INSPECTION OF SEDIMENT LEVELS (OPTIONAL)
  - A.5. IF SEDIMENT IS AT, OR ABOVE, 3" (80 mm) PROCEED TO STEP 2. IF NOT, PROCEED TO STEP 3.
- B. ALL ISOLATOR ROWS
  - B.1. REMOVE COVER FROM STRUCTURE AT UPSTREAM END OF ISOLATOR ROW
  - B.2. USING A FLASHLIGHT, INSPECT DOWN THE ISOLATOR ROW THROUGH OUTLET PIPE
    - i) MIRRORS ON POLES OR CAMERAS MAY BE USED TO AVOID A CONFINED SPACE ENTRY
    - ii) FOLLOW OSHA REGULATIONS FOR CONFINED SPACE ENTRY IF ENTERING MANHOLE
  - B.3. IF SEDIMENT IS AT, OR ABOVE, 3" (80 mm) PROCEED TO STEP 2. IF NOT, PROCEED TO STEP 3.

STEP 2) CLEAN OUT ISOLATOR ROW USING THE JETVAC PROCESS
- A. A FIXED CULVERT CLEANING NOZZLE WITH REAR FACING SPREAD OF 45" (1.1 m) OR MORE IS PREFERRED
- B. APPLY MULTIPLE PASSES OF JETVAC UNTIL BACKFLUSH WATER IS CLEAN
- C. VACUUM STRUCTURE SUMP AS REQUIRED

STEP 3) REPLACE ALL COVERS, GRATES, FILTERS, AND LIDS; RECORD OBSERVATIONS AND ACTIONS.

STEP 4) INSPECT AND CLEAN BASINS AND MANHOLES UPSTREAM OF THE STORMTECH SYSTEM.

NOTES

1. INSPECT EVERY 6 MONTHS DURING THE FIRST YEAR OF OPERATION. ADJUST THE INSPECTION INTERVAL BASED ON PREVIOUS OBSERVATIONS OF SEDIMENT ACCUMULATION AND HIGH WATER ELEVATIONS.
2. CONDUCT JETTING AND VACTORING ANNUALLY OR WHEN INSPECTION SHOWS THAT MAINTENANCE IS NECESSARY.

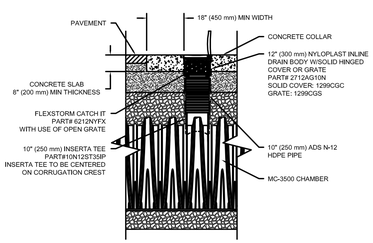

MC-3500 INSPECTION PORT DETAIL
NTS

MC-3500 ISOLATOR ROW DETAILS

REV	DRW	CHK	DESCRIPTION

DATE: 11/19/14 DRAWN: AJM
PROJECT #: CHECKED: AJM

ADS
4640 TRUEMAN BLVD
HILLIARD, OH 43026
1-800-733-7473

SHEET 1 OF 1

THIS DRAWING HAS BEEN PREPARED BASED ON INFORMATION PROVIDED TO US UNDER THE DIRECTION OF THE SITE DESIGN ENGINEER OR OTHER PROJECT REPRESENTATIVES. THE SITE DESIGN ENGINEER IS RESPONSIBLE FOR THE ACCURACY AND ADEQUACY OF THE SITE DESIGN, INCLUDING BUT NOT LIMITED TO SITE LAYOUT, GRADES, BEARING CAPACITY, FOUNDATION STONE, BACKFILL MATERIALS, AND COMPACTION REQUIREMENTS. ADS DOES NOT ASSUME ANY RESPONSIBILITY FOR THE ACCURACY OR ADEQUACY OF THE SITE DESIGN, INCLUDING BUT NOT LIMITED TO THE SITE LAYOUT, GRADES, BEARING CAPACITY, FOUNDATION STONE, BACKFILL MATERIALS, AND COMPACTION REQUIREMENTS, EVEN IF THIS DRAWING HAS BEEN PROVIDED TO THE OWNER OR PROJECT REPRESENTATIVE OF OWNER.

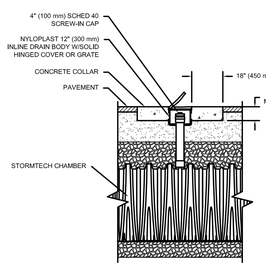

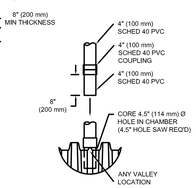

CONNECTION DETAIL
NTS

NOTES:
1. INSPECTION PORTS MAY BE CONNECTED THROUGH ANY CHAMBER CORRUGATION VALLEY
2. ALL SCHEDULE 40 FITTINGS TO BE SOLVENT CEMENTED.

UNDERDRAIN DETAIL
NTS

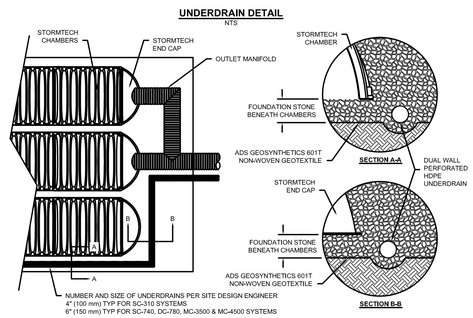

RAKER RHODES Civil
Des Moines, Iowa | Iowa City, Iowa www.rakerrhodes.com

This drawing has been prepared by the Engineer under the Engineer's direct supervision. This drawing is provided as an instrument of service to the Designer / Engineer and is intended for use on this project only. Any reproduction, use, or distribution of information contained herein without the prior written consent of the Engineer is strictly prohibited. (C) Copyright - 2014 by Raker Rhodes Civil.

Charles I and Ruth Colby
National Development Trust
MidTown Center
Windsor Heights, IA

No.	Description	Date
1	Revised as per City Comments	02/17/2015
2	Revised as per City Comments	07/27/2015
3	Revised as per City Comments	08/13/2015

Date 02/17/2015
Job No. RRC14006
Proj. Mgr. SCM
Sheet Title: StormTech Details
Sheet No. C5.2

UNIVERSITY AVENUE

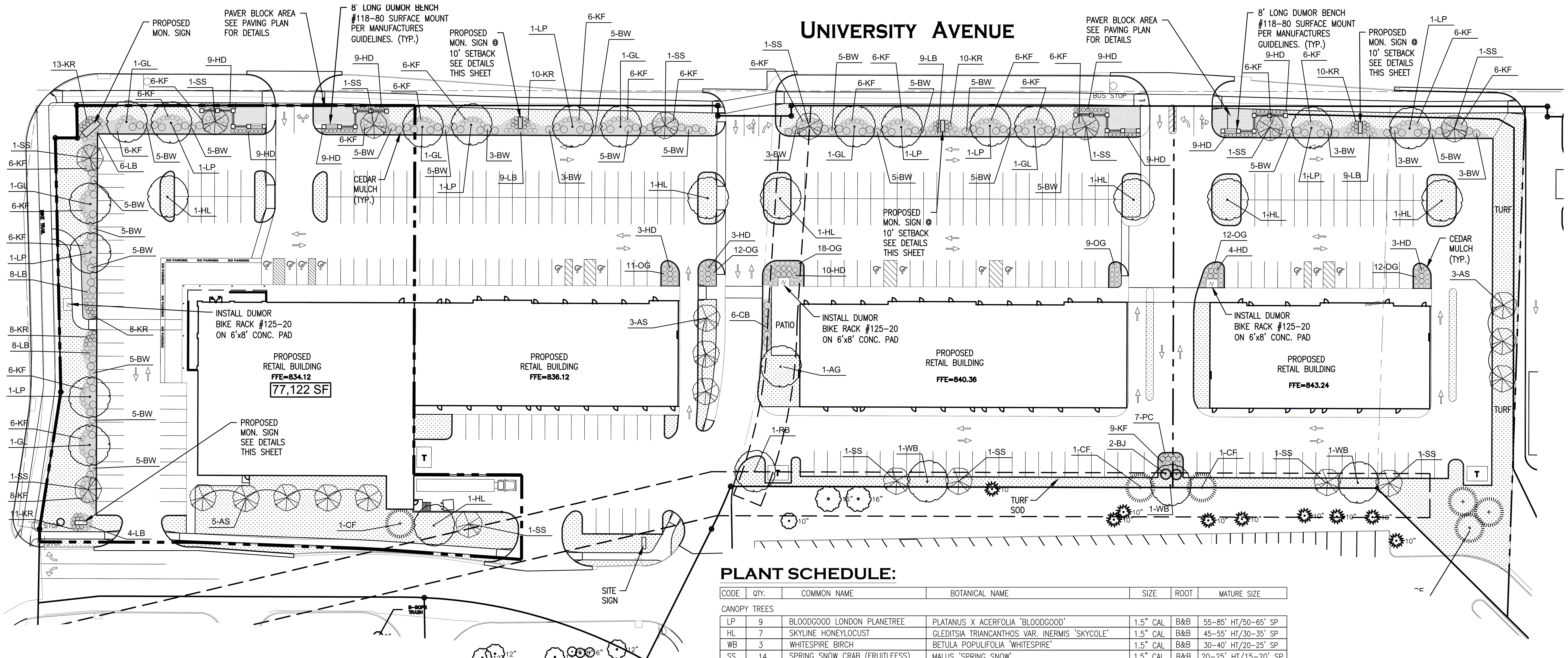

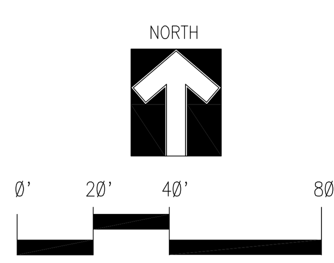

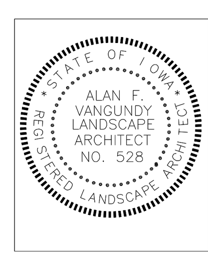

I HEREBY CERTIFY THAT THIS SITE PLAN WAS PREPARED BY ME OR UNDER MY DIRECT PERSONAL SUPERVISION AND THAT I AM A DULY REGISTERED LANDSCAPE ARCHITECT UNDER THE LAWS OF THE STATE OF IOWA.

ALAN F. VANGUNDY
SIGNATURE DATE
JUNE 30, 2017
REGISTRATION EXPIRES
SHEETS COVERED BY THIS SEAL: L1

LEGEND:

CEDAR MULCH
SOD

PLANT SCHEDULE:

CODE	QTY.	COMMON NAME	BOTANICAL NAME	SIZE	ROOT	MATURE SIZE
CANOPY TREES						
LP	9	BLOODGOOD LONDON PLANETREE	PLATANUS X ACERFOLIA 'BLOODGOOD'	1.5" CAL	B&B	55–85' HT/50–65' SP
HL	7	SKYLINE HONEYLOCUST	GLEDITSIA TRIANCANTHOS VAR. INERMIS 'SKYCOLE'	1.5" CAL	B&B	45–55' HT/30–35' SP
WB	3	WHITESPIRE BIRCH	BETULA POPULIFOLIA 'WHITESPIRE'	1.5" CAL	B&B	30–40' HT/20–25' SP
SS	14	SPRING SNOW CRAB (FRUITLEESS)	MALUS 'SPRING SNOW'	1.5" CAL	B&B	20–25' HT/15–20' SP
AS	11	AUTUMN BRILLIANCE SERVICEBERRY	AMELANCHIER X GRANDIFLORA 'AUTUMN BRILLIANCE'	1.5" CAL	B&B	15–25' HT/15–18' SP
AG	1	AUTUMN GOLD GINKGO	GINKGO BILOBA 'AUTUMN GOLD'	1.5" CAL	B&B	50–80' HT/30–40' SP
GL	7	GREENSPIRE LINDEN	TILIA CORDATA 'GREENSPIRE'	1.5" CAL	B&B	40–50' HT/30–35' SP
EVERGREEN TREES						
CF	6	WHITE FIR	ABIES CONCOLOR	6' HT	B&B	40–60' HT/15–30' SP
BJ	2	WICHITA BLUE JUNIPER	JUNIPERUS SCOPULORUM 'WICHITA BLUE'	6' HT	CONT	18–20' HT/5–8' SP
SHRUBS						
CB	6	COMPACT EUROPEAN CRANBERRYBUSH	VIBURNUM OPULAUS 'COMPACTUM'	#2	CONT	4–6' HT/5–6' SP
HD	95	HURON DOGWOOD	CORNUS RACEMOSA 'HURZAM'	#2	CONT	3–4' HT/3–4' SP
KR	70	KNOCK OUT ROSE	ROSA 'RADRAZZ'	#2	CONT	3' HT/3' SP
BW	123	WINTERGREEN LITTLELEAF BOXWOOD	BUXUS MICROPHYLLA 'WINTERGREEN'	#2	CONT	3–4' HT/3–4' SP
PERENNIALS						
OG	74	SAPPHIRE BLUE OAT GRASS	HELICTOTRICHON SEMPERVIRENS 'SAPHIRSPRUDEL'	#1	CONT.	24–30" SP/2' HT
KF	161	KARL FOERSTER'S FEATHER REED GRASS	CALAMAGROSTIS ACUTIFLORA 'KARL FOERSTER'	#1	CONT.	3' SP/4–5'HT
LB	53	THE BLUES LITTLE BLUESTEM	SCHIZCHYRIUM SCOPARIUM 'THE BLUES'	#1	CONT	2–3' HT/2–3' SP
PC	7	MAGNUS PURPLE CONEFLOWER	ECHINACEA PURPUREA 'MAGNUS'	#1	CONT	3' HT/2' SP

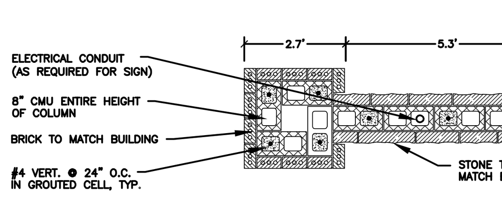

BASE SECTION 'B'

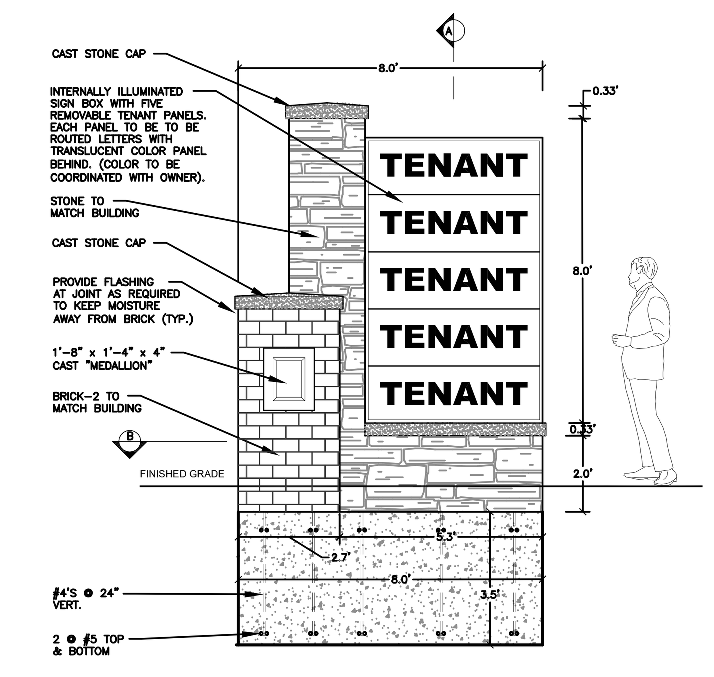

FRONT ELEVATION

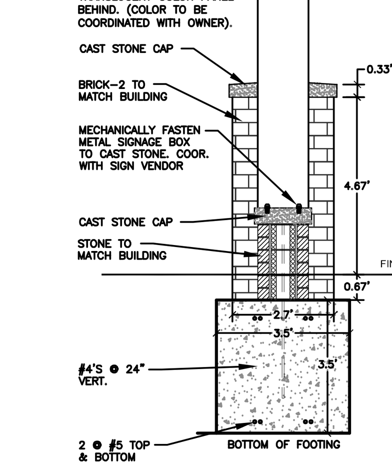

VERTICAL SECTION 'A'

MONUMENT SIGN DETAILS

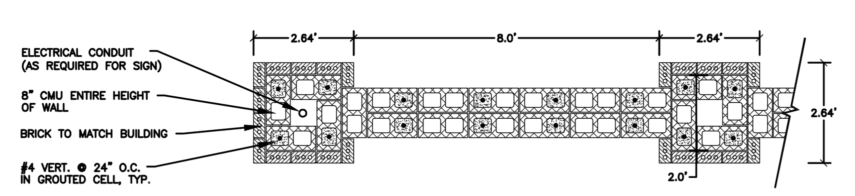

BASE SECTION 'C'

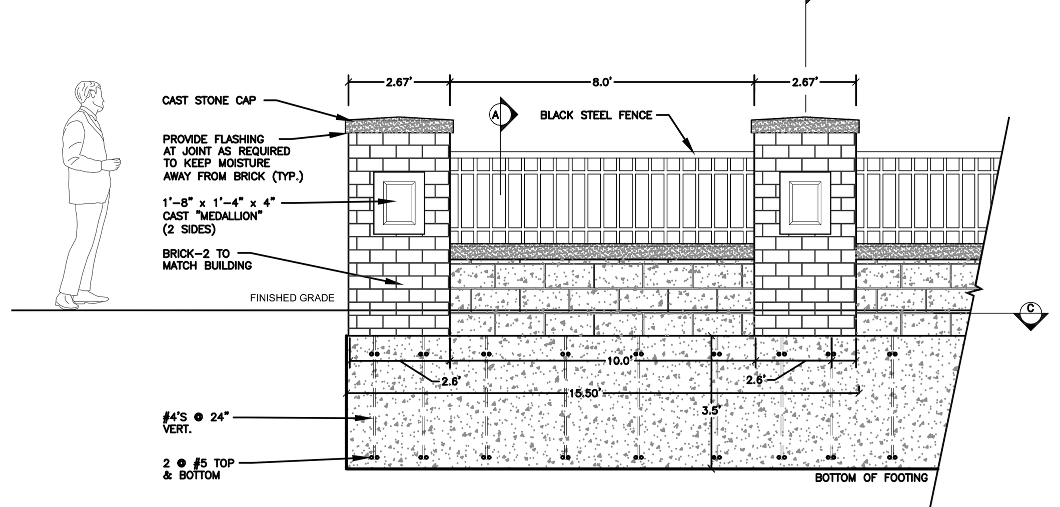

FRONT ELEVATION

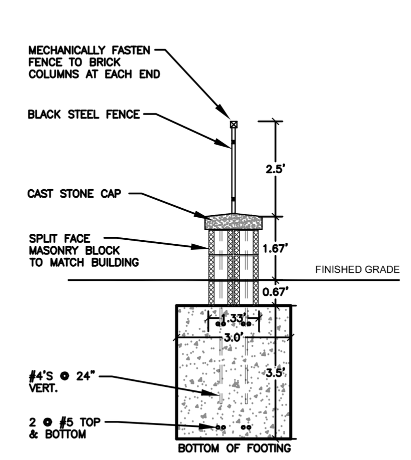

VERTICAL SECTION 'A'

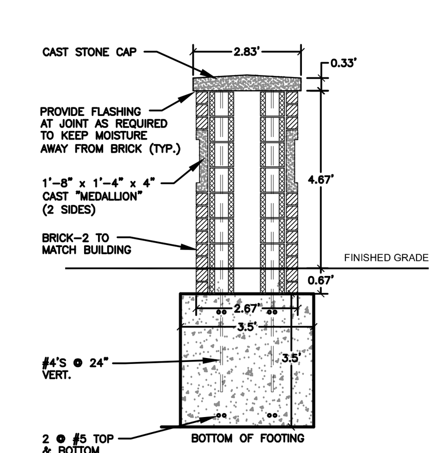

VERTICAL SECTION 'B'

STREETSCAPE WALL DETAILS

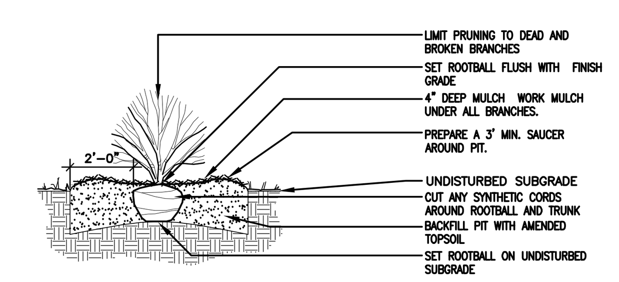

SHRUB PLANTING (TYP.)
SCALE: NOT TO SCALE

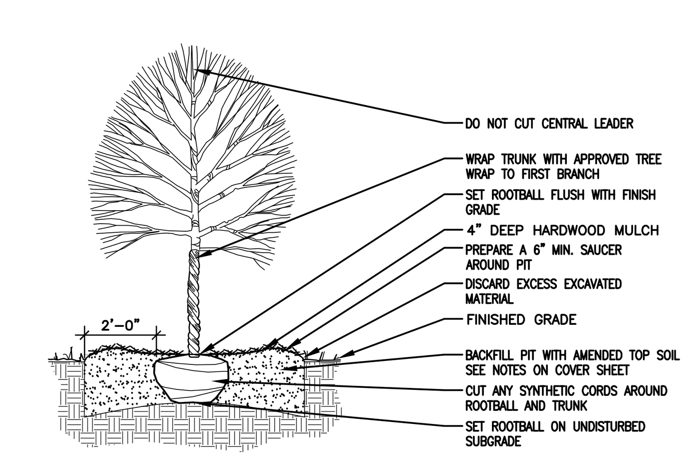

DECIDUOUS TREE PLANTING (TYP.)
SCALE: NOT TO SCALE

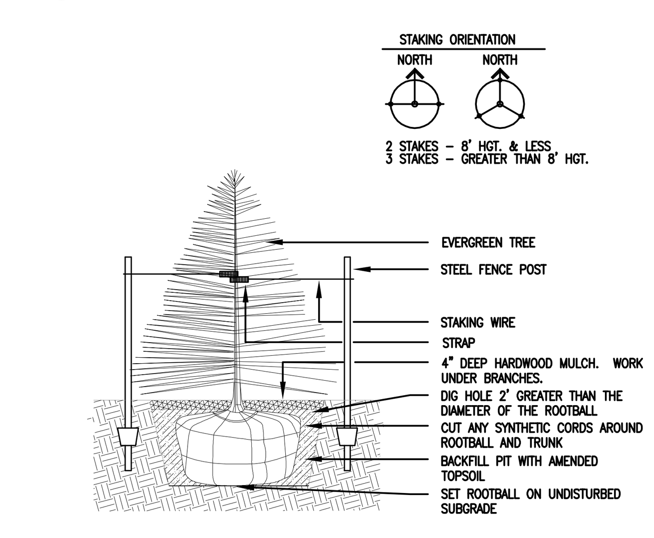

(B&B) CONIFEROUS TREE PLANTING (TYP.)
SCALE: NOT TO SCALE

LANDSCAPE NOTES:

1. ALL SITEWORK, SEEDING, AND LANDSCAPING SHALL BE IN ACCORDANCE WITH LOCAL JURISDICTION'S STANDARD SPECIFICATIONS UNLESS SPECIFIED OTHERWISE.

2. NO PLANTING WILL BE INSTALLED UNTIL ALL GRADING AND CONSTRUCTION HAS BEEN COMPLETED IN THE IMMEDIATE AREA.

3. THE CONTRACTOR SHALL BE RESPONSIBLE TO TAKE WHATEVER MEANS NECESSARY TO ESTABLISH PERMANENT SOIL STABILIZATION.

4. HOLES FOR TREES, EVERGREENS AND SHRUBS SHALL BE 2' GREATER THAN THE THE ROOTBALL.

5. ALL UNSURFACED AREAS ARE TO RECEIVE FOUR INCHES OF TOPSOIL. CONTRACTOR MUST SOD, FERTILIZE AND MAINTAIN ALL AREAS OUTSIDE PAVED AREAS THAT WERE DISTURBED DURING CONSTRUCTION UNTIL AN ACCEPTABLE STAND OF GRASS IS ESTABLISHED.

6. COMMERCIAL GRADE PLASTIC EDGING SHALL BE PROVIDED AROUND ALL LANDSCAPE BEDS. ALL EDGING SHALL BE INSTALLED AT A DEPTH THAT IS FLUSH WITH THE SURROUNDING FINISH GRADE.

7. CANOPY TREE, EVERGREEN TREE AND SHRUB LANDSCAPE BEDS SHALL HAVE WEED–PREVENTION FABRIC INSTALLED. WEED PREVENTION FABRIC SHALL COVER THE ENTIRE LANDSCAPE BED, PAYING CLOSE ATTENTION TO LEAVE NO GAPS ALONG THE EDGES.

8. PERRENIAL BEDS SHALL RECEIVE NO WEED–PREVENTION FABRIC, BUT SHALL BE WEEDED BEFORE INSTALLATION, SHALL RECEIVE PRE–EMERGENT APPLIED TO THE SOIL AND PRE–EMERGENT APPLIED TO THE MULCH AFTER INSTALLATION.

9. ALL LANDSCAPE BEDS SHALL RECEIVE ONE APPLICATION OF PRE–EMERGENT, SUCH AS PREEN. PRE–EMERGENT SHALL BE APPLIED IN THE AMOUNT RECOMMENDED BY THE MANUFACTURER. PRE–EMERGENT SHALL BE APPLIED TO BARE GROUND IN LANDSCAPE BEDS PRIOR TO MULCH INSTALLATION, AND TO THE MUCLH AFTER INSTALLATION.

10. CANOPY TREES AND EVERGREEN TREES SHALL RECEIVE A MINIMUM OF 4" SHREDDED HARDWOOD MULCH. MULCH AROUND TREES SHALL BE EXTENDED OUT AS FAR AS THE HOLE DUG FOR PLANTING AND SHALL BE PLACED IN SUCH A WAY AS TO FORM A BOWL AT THE BASE OF THE TRUNK ALLOWING WATER TO COLLECT MORE EFFICIENTLY.

11. ALL PLANT MATERIAL SHALL MEET MIN. REQUIREMENTS IN THE LATEST EDITION OF THE AMERICAN STANDARD FOR NURSERY STOCK, AMERICAN ASSOCIATION OF NURSERYMEN.

12. PLANT MATERIALS SHALL BE OF APPROPRIATE SIZE AND TYPE AS SHOWN IN THE PLANTING SCHEDULE. ANY SUBSTITUTIONS TO THE PLANT SCHEDULE SHALL BE SUBMITTED IN WRITING FOR APPROVAL BY THE LANDSCAPE ARCHITECT.

13. PLANT QUANTITIES ARE FOR CONTRACTOR'S CONVENIENCE, DRAWING SHALL PREVAIL WHERE CONFLICT OCCURS.

14. OVERSTORY TREES SHALL HAVE STRAIGHT LEADERS AND NO 'V' CROTCHES. UNDERSTORY TREES SHALL HAVE NO BRANCHES BELOW 30" AND NO 'V' CROTCHES.

15. REMOVE ALL WIRE, TWINE OR BURLAP FROM THE ROOTBALLS OF STREET TREES PRIOR TO PLANTING.

16. THE CONTRACTOR SHALL BE RESPONSIBLE FOR THE REMOVAL OF IDENTIFICATION TAGS CONTAINERS, AND BURLAP CORDS ON ALL PLANT MATERIAL PRIOR TO COMPLETION OF THE CONTRACT.

17. CONTRACTOR SHALL GUARANTEE ALL PLANT MATERIALS FOR A PERIOD OF ONE YEAR FROM DATE OF INSTALLATION.

18. CONTRACTOR SHALL BE RESPONSIBLE FOR ADJUSTING ANY TREES THAT HAVE BECOME TILTED WITHIN ONE YEAR FROM DATE OF INSTALLATION.

19. CONTRACTOR SHALL BE RESPONSIBLE FOR WEEDING ALL PLANT BEDS FOR THREE MONTHS OF THE FIRST GROWING SEASON.

20. CONTRACTOR TO SOD ALL DISTURBED AREAS OF THE SITE NOT SET ASIDE AS PLANTING BEDS.

21. SOD, WHERE APPLICABLE, SHALL BE WELL–ROOTED AND BE COMPLETELY FREE FROM NOXIOUS WEEDS AND REASONABLY FROM OTHER OBJECTIONABLE GRASSES, STONES AND FOREIGN OBJECTS.

22. SOD, WHERE APPLICABLE, SHALL BE LAID PARALLEL TO THE CONTOURS AND HAVE STAGGERED JOINTS. ON SLOPES STEEPER THAN 3:1 OR DRAINAGE SWALES THE SOD SHALL BE STAKED IINTO THE GROUND.

23. ALL SODDED AND DISTURBED AREAS SHALL BE INSPECTED AFTER EACH RAINFALL. ALL WASHES, GULLIES, AND RILLS SHALL BE IMMEDIATELY REPAIRED AND RESODDED.

24. CONTRACTOR SHALL REPAIR ALL DAMAGE TO PROPERTY AND EXISTING UTILITIES FROM PLANTING OPERATIONS AT NO COST TO THE OWNER.

25. ALL UNPAVED AREAS DISTURBED WITHIN THE PUBLIC RIGHT–OF–WAY TO BE SODDED.

simonson
simonson & associates architects LLC
1717 ingersoll avenue suite 117 des moines ia 50309
phn 515 440 5626 www.simonsonassoc.com

This drawing has been prepared by the Architect, or under the Architect's direct supervision. This drawing is provided as an instrument of service by the Designer / Architect and is intended for use on this project only. Any reproduction, use, or disclosure of information contained herein without the prior written consent of the Architect is strictly prohibited. (C) Copyright 2015 by Simonson & Associates Architects, L.L.C.

MIDTOWN CENTER
73RD STREET & UNIVERSITY AVENUE
WINDSOR HEIGHTS, IOWA

Issue / Revision	Date
FIRST SUBMITTAL	01-13-2015
SECOND SUBMITTAL	02-16-2015
THIRD SUBMITTAL	03-19-2015
FORTH SUBMITTAL	07-29-2015
FIFTH SUBMITTAL	08-14-2015

Job No. 12043
Proj. Mgr. AVG
Sheet Title
LANDSCAPE PLAN
Sheet No.
L1